AEROSPACE & DEFENSE™
TECHNOLOGY
The Engineer's Guide to Design & Manufacturing Advances

Computer Simulation's Role in Advancing Composite Aircraft Structures

Many of the computer simulation tools used today got their start in the Aerospace industry but their use has always been coupled with significant physical testing. The introduction of composite aircraft structures, however, is creating a need for more reliance on simulation tools and methods. Aircraft designers find many benefits in composites, but they also are wary of some of the potential difficulties that composites can present—issues that the latest simulation software is designed to manage.

Advantages of Composites

The aircraft designer is drawn to composites largely because of their extremely high ratio of stiffness to weight. Exceptionally stiff carbon fibers are combined with a plastic glue-like matrix to create a very light but stiff material that offers many advantages over more conventional materials. Carbon composites have a stiffness and strength equal to or exceeding that of most metals but with a density less than aluminum. This leads to lighter and more fuel efficient aircraft.

Composites also have very attractive fatigue properties. When cracks form in the matrix, they are quickly arrested by the fibers so they don't propagate like they do in a metal structure. Various levels of material processing can be implemented to control the level of voids in the matrix which then become crack initiation sites so the fatigue performance can often be controlled to not pose any risk to the structure. Composites can fracture, but the amount of force that must be exerted to produce cracks in structural composites is substantial and much of the energy goes into breaking the fiber-matrix bond rather than deformation so the material itself absorbs most of the energy.

The aircraft engineer gains flexibility in design from composites. The stiffness properties of composites can be tuned to an extent, because they are stiffer in the direction that follows the reinforcing fibers. The way composites are built up generally involves laminates in which unidirectional layers of fabric are stacked in a variety of orientations to provide maximum stiffness where it is required in the structure. In addition, engineers can tailor composites to change shape slightly when a load is applied. This characteristic enables the de-

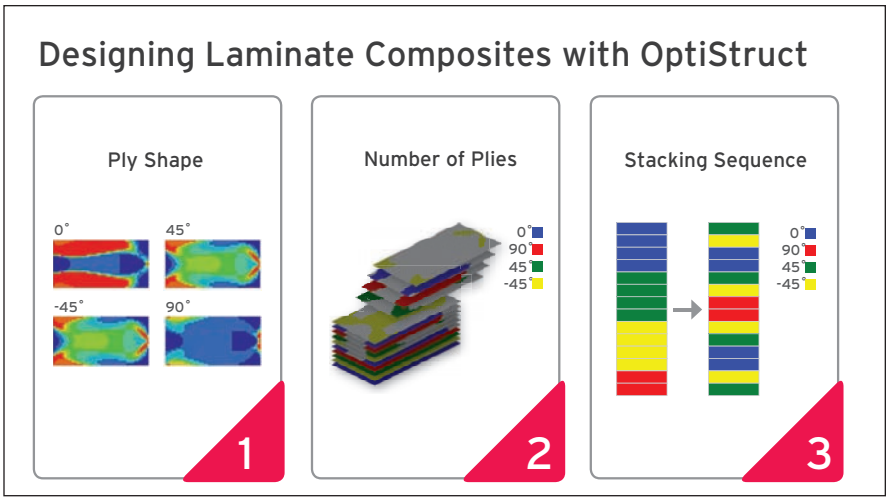

Overview of 3-phase approach for composites optimization with OptiStruct.

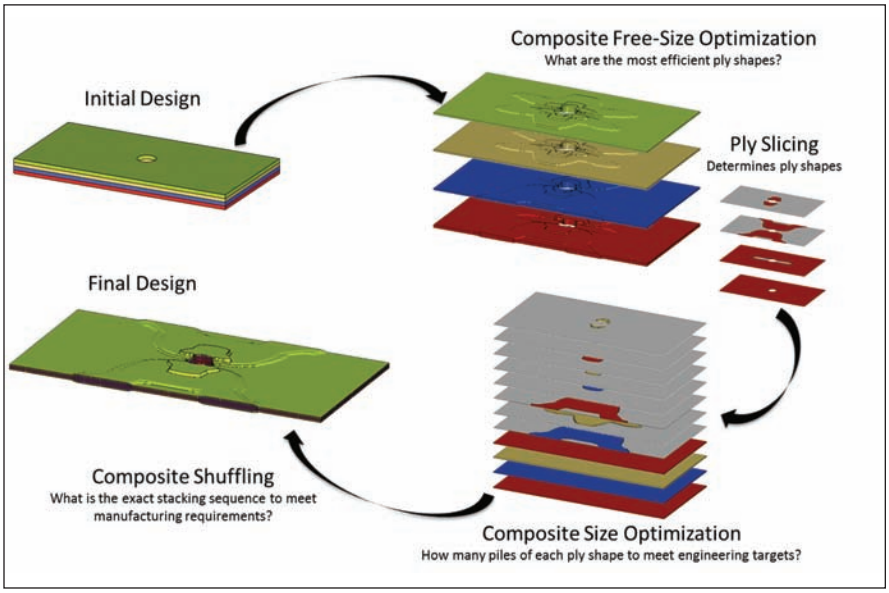

More detailed picture showing the composites optimization approach in OptiStruct.

velopment of wings that are more aerodynamically efficient.

A unique benefit of composite structures is the ability to embed sensors in the skin of the aircraft, allowing pilots to monitor for any damage. The capacity to discover a small problem before it grows into an urgent one makes such sensors invaluable.

A key benefit of composites is that they are inherently corrosion resistant. Since they do not contain metals, there is no galvanic corrosion of the material. Corrosion is a major issue in metal aircraft requiring frequent inspection and tight control over avoiding trapped moisture in the structure. Over time, corrosion can cause metal to fail in disastrous fashion, as witnessed in news reports about portions of weakened metal fuselages peeling off in flight. The environment in which aircraft operate is very corrosive, so a metal airplane must be inspected frequently for corrosion damage. With the corrosion resistance of composites, inspection intervals for composite airframes are increased saving operators time and expense.

In addition to the cost and performance advantages to the airlines, composite structures can make flying more comfortable and convenient for passengers. With a composite fuselage, the difference in air pressure inside and outside the aircraft can be higher, since composites handle repeated cabin pressurization and depressurization much more effectively than metals, which are subject to fatigue from these operations. Therefore, the in-flight cabin pressure can be raised, resulting in less ear popping when the plane lands. The humidity inside the cabin also can be set at a higher level in a composite fuselage, which is not subject to corrosion. Higher humidity can prevent headaches and dry mouth after extensive flight times. Yet another benefit is that windows in composite aircraft can be larger because they are supported by very stiff material.

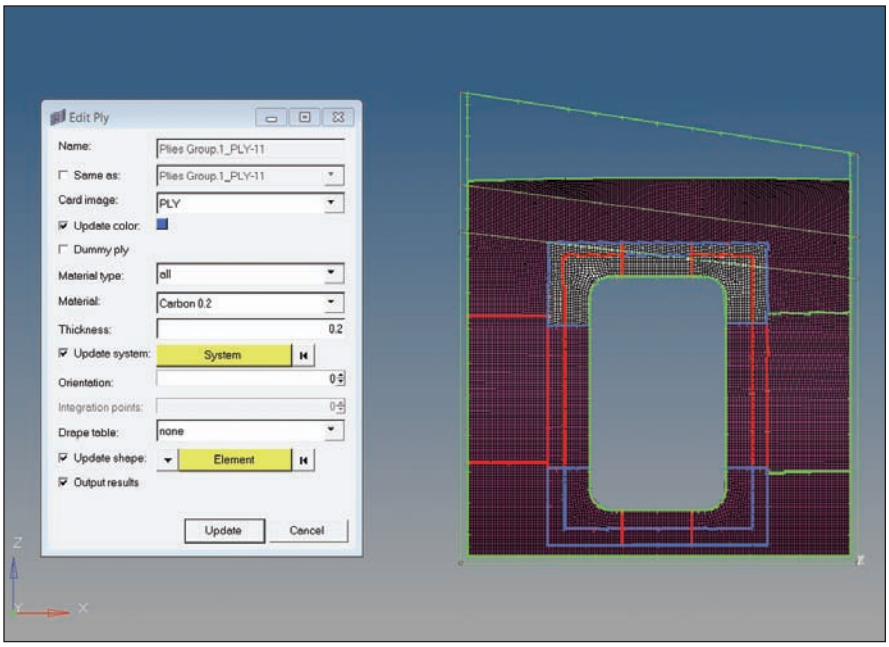

Ply shape definition in HyperMesh close to the manufacturing process.

Issues Raised by Composites

While composites resolve many problems that are common to metal structures, they have issues of their own. One of the most significant is that, since they are built up from a number of ply layers, composites can delaminate between those layers at the points where they are weakest.

Delamination is especially likely where loads perpendicular to the layers or shear loads are applied. Similar to exerting pressure on a deck of cards, the stack may fly apart if pushed in the wrong direction. Internal load distributions can be extremely complex in composites, and in certain combinations of loads, layers can tend to separate.

To meet the challenge of delamination and avoid buckling, composite-structure designers must confirm that loads to which the composite is subjected are, for the most part, in-plane where fibers are the strongest.

Design engineers must account for all of the many potential load paths in the structure if they want to reduce the chances of delamination, and this is one reason that computer simulation is becoming more critical to composite-aircraft design.

Another issue that engineers face is that, unlike with metals, no way exists to inspect composites for weakness or internal damage. When delamination or cracks occur, they usually are internal, hidden inside the composite material where it cannot be seen. Embedded sensors help catch these faults, but they require an approach that is new to the aircraft industry, necessitating adjustments in processes.

One of the most intractable problems surrounding composites becomes apparent when joining composite components to metal structures. Since composites are the stiffer material, they bear most of the load. Manufacturers compensate for this increased stress by simply building up the composite-to-metal joint with more composite material. That adds weight, however, and the metal tends to expand and contract at a different rate than the composite to which it is connected. That kind of imbalance can

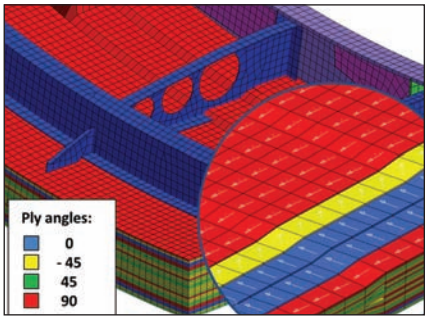

Composites laminate visualization with overlay of ply-layer angles.

lead to failure of the joint.

This difficulty can be resolved, of course, by simply making more components from composites, creating an all-composite joint. Such a solution is not easy, however. Composites normally are joined with an adhesive layer that is itself prone to delamination when subjected to some kinds of loads. Two composite parts could be joined by fasteners, but that process introduces stress concentrations from drilled holes and the different rates of expansion between the composite and the fastener.

The ideal solution is to develop more comprehensive, integral composite structures so that the joining of parts is avoided, and aircraft developers are making great progress in developing integral manufacturing methods.

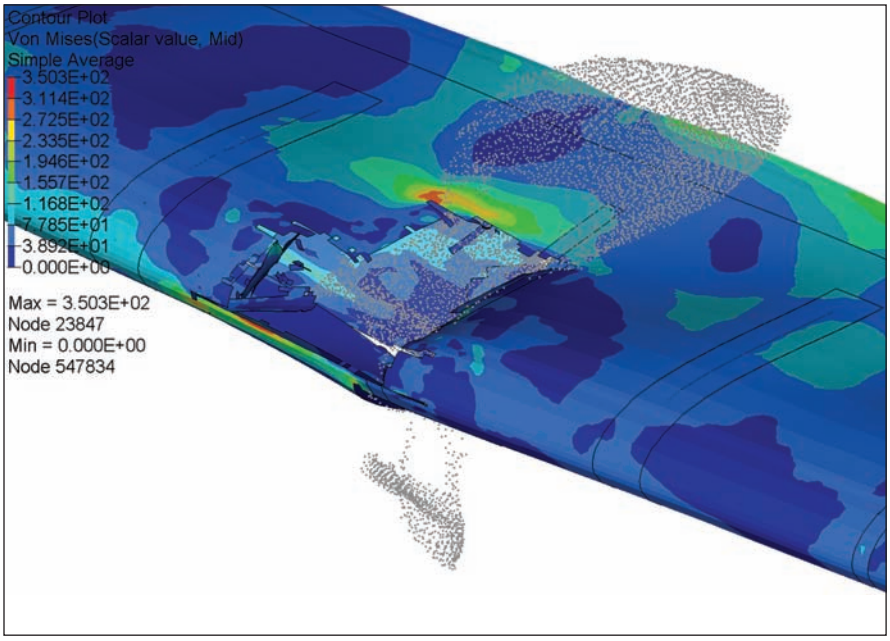

Bird strike analysis with RADIOSS including failure and delaminating theories.

The Simulation Solution

Clearly, engineers, designers and manufacturers who want to employ composites in aircraft must consider and test a multitude of factors. Increasingly they rely on computer simulation to help them with the task of evaluating all the variables that can affect composite structures.

As in other industries, simulation can be used to design and test composite structures on computer screens before investing in an expensive build of the physical aircraft. With composites, however, simulation becomes more complicated. Unlike metal and plastic components, composites are not uniform materials. They consist of layers of fibers with specific directionality that can impact the way the structure reacts. This heterogeneity exponentially increases the design variables that must be considered. As a result, we have seen many very conservative designs emerge for aircraft that fail to fully capitalize on the valuable characteristics of composites.

Today, however, engineers have available to them simulation software that can manage the burden of optimizing composite-based design with more reliable and systematic results. This software can reliably calculate the number and location of plies that should be incorporated, the ply angles that should be used and the best way to stack the plies. The computer-based software can evaluate hundreds of load cases simultaneously, considering innumerable variables, and automatically produce the calculations for the best composite structure for a specific application.

With such advanced suites of simulation software, engineers can easily map composite ply shapes and parameters onto a simulation model and receive results for both individual layers and the total aggregation of layers. The simulations produce results that are not easily tested and can provide great insight into the design and potential problems that may exist. For example, simulation can predict out-of-plane stresses between layers internal to the structure for which there is no reliable physical testing method. In addition, optimization methods can then develop a design that minimizes these stresses to remove the potential for delamination under normal loading conditions.

Simulation is becoming a crucial process in the design of new-generation composite aircraft, producing safer, more comfortable and more fuel-efficient designs that are certain to boost the application of composites to more structures in the years ahead.

This article was written by Dr. Robert Yancey, Vice President of Aerospace Solutions, Altair Engineering (Neptune Township, NJ). ***For more information, visit http://info.hotims.com/49752-501.***

Learn more about Altair's products & services by visiting altair.com

About Altair

From computer-aided engineering to high performance computing, from industrial design to cloud analytics, for the past 30 years Altair has been leading the charge to advance the frontiers of knowledge, delivering innovation to more than 5,000 corporate clients representing the automotive, aerospace, government and defense industries and a growing client presence in the electronics, architecture engineering and construction, and energy markets.

Altair

Altair Engineering, Inc., World Headquarters: 1820 E. Big Beaver Rd., Troy, MI 48083-2031 USA
Phone: +1.248.614.2400 • Fax: +1.248.614.2411 • www.altair.com • info@altair.com