The Magnet Experts

Leaders in the Design and Manufacture of Compression Bonded Magnets and Magnetic Assemblies

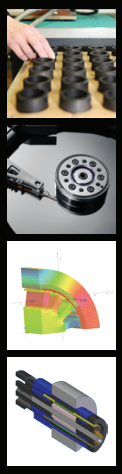

At Bunting® Magnetics Europe Limited we have for over 50 years been providing customers with leading-edge magnetic materials. Our considerable experience in the manufacture and design of magnets and magnetic assemblies will help you solve today's demanding design problems.

With complete design capabilities and flexible manufacturing methods, Bunting Magnetics Europe Ltd is the ideal supplier. From selecting the right material, to developing the best manufacturing method, to delivery, we are your **Total Magnet Solution**.

Visit **BuntingEurope.com** for all your magnet requirements.

BUNTING® Magnetics Europe Limited

Tel: +44 (0) 1442 875081 Fax: +44 (0) 1442 875009
Email: sales@buntingeurope.com • www.buntingeurope.com

How to efficiently design power transformers

Simon Guicheteau

Altair Engineering, Inc

Nowadays Power Transformers need to optimise their efficiency to make sure a minimum amount of losses are generated from the various physical phenomena. Flux™ Finite Element studies allow transformer designers to accurately analyse the different losses (Joule losses, iron losses, stray losses) to enhance the performance of their transformers. A few steady-state and transient tests permit determining the electrical and mechanical constraints that the power transformer will have to endure in its life. In addition, thermal studies can complete these analyses to detect and prevent hot spots on the tank or in the windings.

Introduction

Since approximately 40% of grid losses are dissipated from power transformers, there is now a great need to analyse these important components of the electrical network. Flux 2D / 3D plays a key role in those investigations. A slight improvement in efficiency can save a lot of energy in the life cycle of a transformer. Nowadays every aspect in the design can affect the efficiency of the power transformer: global losses but also accurate local quantities. Indeed, losses in the windings or skin effect are very difficult to estimate with traditional analytical methods. Flux 2D / 3D Finite Element analysis has become an essential tool to consider all aspects of a power transformer and optimise its behavior. Some losses are still very difficult to measure experimentally and require the following methods of simulation to be evaluated.

This article illustrates different tests in steady state and transient studies to characterise a power transformer, determine an equivalent circuit and design it to handle transient electrical and mechanical constraints. It also shows the thermal simulations that can complete the whole design of a power transformer.

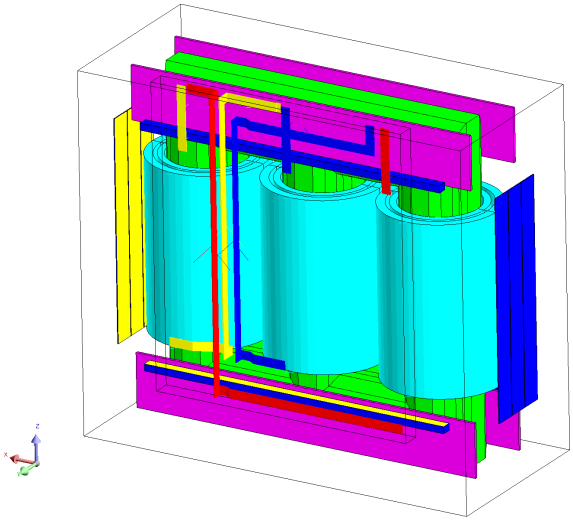

Figure 1 3D Power Transformer example for No Load and Short Circuit test

Specific physical models for Power Transformers

Some specific models exist to help transformer designers represent all the complex phenomena happening in their device.

In order to define every different condition applied to the power transformer, Flux **circuit context** embedded in the finite element part allows modeling of power sources, switches, diodes, inductors… The different coil conductors and solid conductors are also represented in this circuit context and are directly linked to the corresponding region in the 2D / 3D model.

Furthermore, the modeling of conductor regions is an important aspect. Homogeneous regions allow the easy description of the windings characteristics (number of turns, material, filling factor…). Some advanced models in Flux permit the evaluatation of **skin and proximity effects in the coils** without representing each wire. This reduces the time and memory needed for the simulations and ensures accurate results.

Thanks to **dedicated regions** such as laminated region, thin conducting and impedance surface, it is possible to model the skin effect in conductive parts (transformer tank, frames, shunt fastening) up to several MHz. For **laminated materials** for instance, a specific region exists so that the designer does not need to represent and mesh every thin layer of this region: the anisotropy is considered during the solving.

In addition, a model of **hysteresis** can increase the accuracy of the iron losses computation and deals with remanence issues for transient aspects.

Not all these models were used for the following simulations.

Flux multi-parametric studies permit the direct solving and analysis of different geometry configurations or different physical parameters in order to consider various transformers.

Various tests to design a power transformer

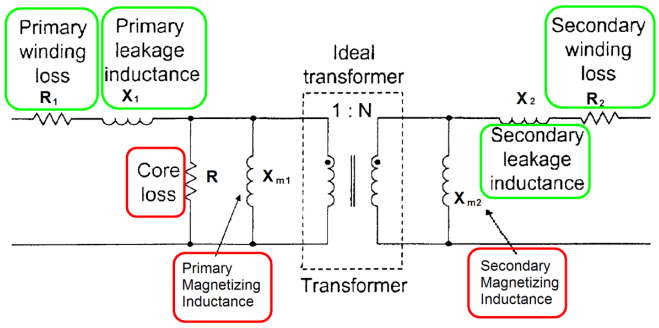

Figure 2 Equivalent circuit for a real power transformer

The two main tests to design any kind of transformer in 2D and 3D, **No Load test** and **Short Circuit test**, are run in a steady state study. From these tests, it is possible to determine an equivalent circuit for a transformer. The components in red on Figure 2 can be determined with the no load test and the others in green can be determined with the short circuit test.

Some transient simulations are also important to design a transformer: the **Inrush Current test** for instance allows determining the current and mechanical constraints that the transformer has to endure during its energisation when it is connected to the network.

These first two tests have been carried out on a 150MVA HV transformer model (courtesy of WTC) (132kV / 14.1kV). This example is a **complete 3D model** in a tank, with frames, yokes, shunts and distribution bars illustrated in Figure 1. It combines different physical regions and materials and illustrates well all the possible studies on a 3D power transformer. The transformer is defined in a circuit with voltages sources at the primary and resistive loads at the secondary.

No Load test

In this first test, the transformer's secondary is open. So the core is saturated and it is possible to measure the magnetising current in the primary. Also, in this situation, the magnetic leakages can be neglected which allows reducing the complexity of the geometry and representing only the core and the windings. The other conductive parts don't affect the results of this case. This choice is really time-saving and requires less memory.

The **magnetising reactances** at the primary and secondary can be computed thanks to the values of voltages and the result of the reactive power in the domain. The magnetising current is also available to measure in the circuit. A **Bertotti model** evaluates the iron losses in every magnetic region. The following table details some of these results.

Magnetising Reactance at the primary Xm1	290.4 kΩ / phase
Magnetising Reactance at the secondary Xm2	3319 Ω / phase
Global Iron Losses	37.9 kW

Table 1 Results from the no load test

Short Circuit test

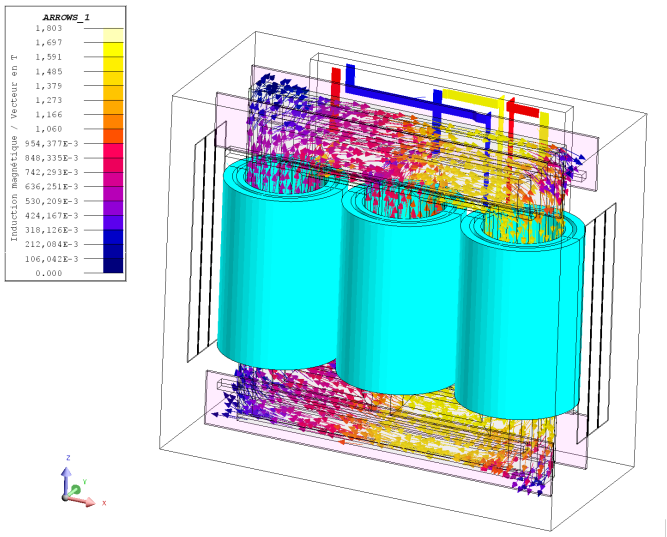

Figure 3 Arrows of Induction in the core

In this second test, this is the opposite situation: the magnetising current is neglected and the core is very little magnetised. However, there is an important leakage of magnetic flux, which means Eddy current losses appear in all the surrounding conductive parts. So this test needs the whole geometry to be correct. The model is also composed with distribution bars to model the effect of these conductors on the global system. The computation of **stray losses** is very important because these kind of losses are impossible to measure and the simulation is the only way to estimate its value. In order to model this case, the values of the resistances at the secondary are very low so that the voltages tend to 0.

As in the previous test, the **leakage reactances** are easy to compute from the voltages and the reactive power in the domain. The different **losses in the conductive parts** and in the circuit can also be computed.

The magnetic field radiations outside the tank of the transformer can also be analysed so that they do not exceed the radiation regulations in some countries.

The following table details some of these results in this particular case.

Leakage Reactance at the primary X1	12.9 Ω / phase
Leakage Reactance at the secondary X2	0.147 Ω / phase
Joule losses in the windings	413.6 kW
Total Eddy current losses in the windings	34.7 kW
Total Stray losses	7.6 kW
Total Stray losses without shunts	8.9 kW

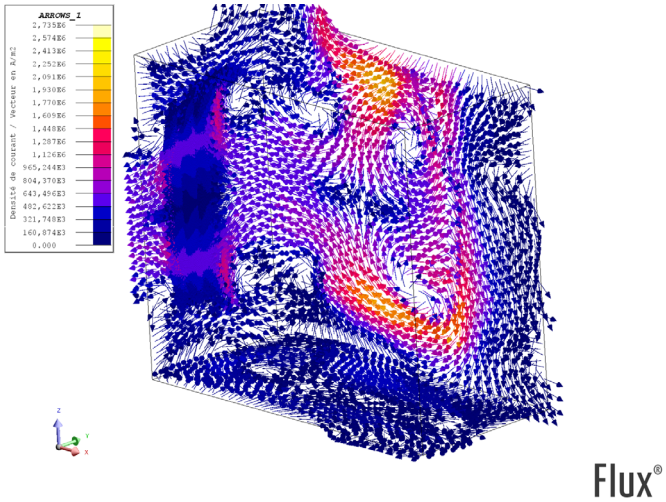

Figure 4 Isovalues of Current density on the tank

Inrush Current test

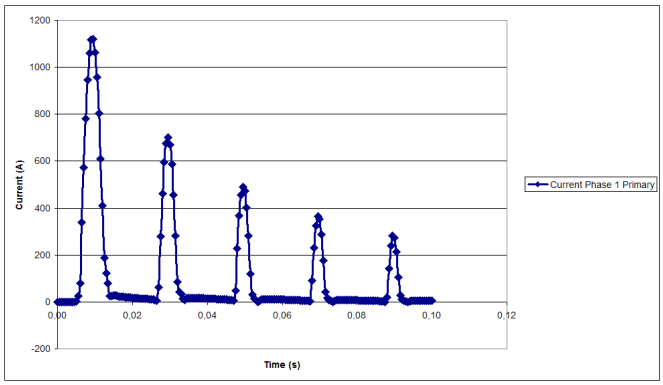

Figure 5 Current in a phase at the primary in the inrush current test

Different transient studies can be set up such as electrical defaults like the rupture of a coil or the disconnection of a power transformer for example.

In particular, the energisation of an unloaded power transformer may have undesirable effects on power quality and may damage the transformer. The third test that was realised consists in measuring these **constraints provoked by the inrush current**. This phenomenon brings an important current for a short amount of time and thus creates important forces on the windings. This test has been carried out on a 2D smaller transformer. This model is only represented with a core and windings in a tank as shown in Figure 6.

A scenario of 0.1 s gives good results to estimate the constraints on the transformer. The peaks of current and forces also correspond to magnetic saturation in the core. The results of maximum current and force are displayed in the following table.

Inrush current in phase 1 at the primary	1118 A
Maximum Laplace Force on the external winding of phase 1	1212 N

Table 3 Results from the inrush current test

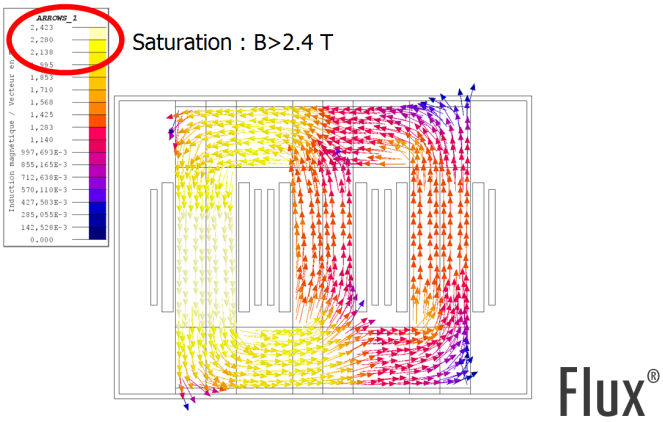

Figure 6 Induction in the core for the peak value of current

These results are very important in order to correctly design the power transformer so that it can endure transient constraints.

Thermal analysis

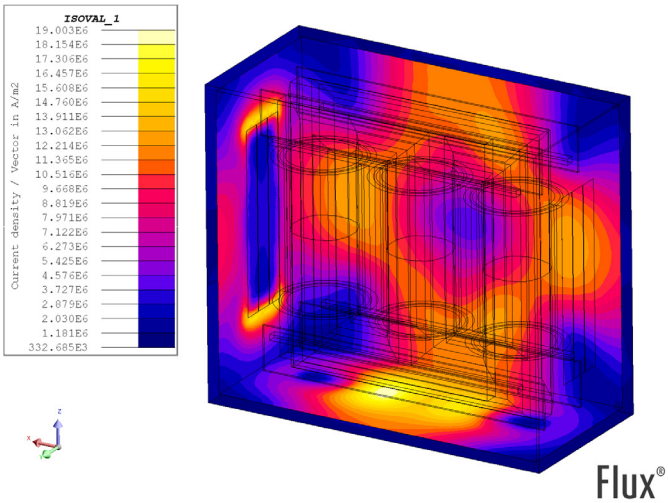

Figure 7 Isovalues of Current density on the tank

In addition to magnetic application, Flux 2D / 3D thermal studies and couplings with other applications are available to **detect hot spots on the conductive parts**.

For instance, the heating of the tank of a transformer can be computed in a steady state thermal application from the Eddy currents in the magnetic results. Alternatively, it can be coupled much more strongly thanks to a dedicated application. This coupling with a thermal analysis can also take into account the variation of the material's properties according to the temperature. Magnetisation curves (B(H)) can be defined with specific coefficients so that it depends on the temperature at every node. So during the solving, there will be iterations so that magnetic and thermal simulations are taken into account simultaneously.

From the previous 3D case, thermal properties have been defined and such coupling between magnetic results and thermal results has been set. The temperature on the tank reached after the solving is illustrated on Figure 8.

Maximum temperature on the tank surface in steady state	207.9 °C
Maximum temperature on the frames in steady state	370.2 °C

These Flux thermal simulations can bring significant information to a transformer designer in order to prevent the heating and ensure the resistance of the power transformer to these constraints. Taking these results into account can help increase the life of a transformer.

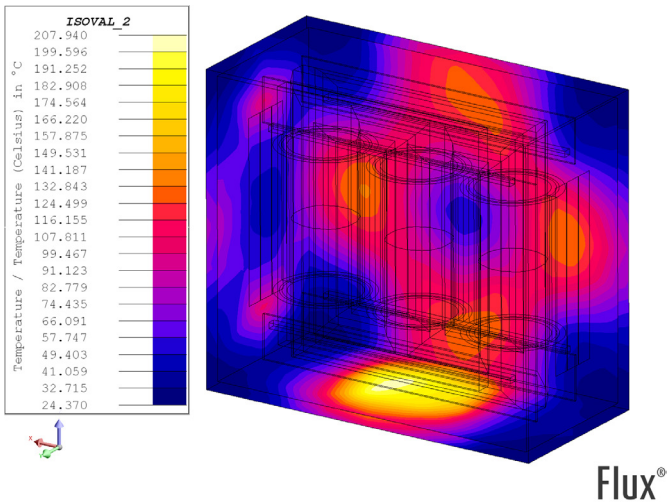

Figure 8 Isovalues of Temperature on the tank (°C)

Going further

Some other advanced simulations have not been detailed here. Other studies or models can complete the set of simulations such as:

- **Optimisation:** After defining several constraints and objectives, it is possible for instance to use HyperStudy® algorithms to optimise the transformer performances by modifying geometrical parameters (dimensions of the core, of the windings, of the shunts, etc.) or physical parameters (number of turns, materials, etc.). A complete optimisation can significantly reduce the number of computations needed to determine the best configuration of parameters to reduce all the losses.
- **Electrostatic study:** The analysis of electric fields in Flux 3D permits the prevention of **dielectric breakdowns** between the coil windings. It also allows the computation of the parasitic capacitance between each different parts of the power transformer.

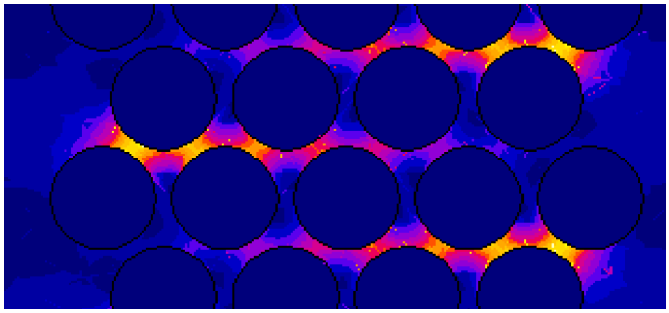

Figure 9 Electric field between windings

SENSOR TECHNOLOGY
1976 - 2016 CELEBRATING 40 YEARS
TORQSENSE®
ROTARY TORQUE TRANSDUCERS
Non-contact digital technology
High resolution & accuracy
Torque ranges from 10mNm up to 13,000Nm
USB, RS232 and CANbus outputs
Integeral or separate electronics
Voltage & current outputs
Digital input for configuring with our TorqView software
Suitable for OEM applications
View the full range & request your quotation at www.sensors.co.uk/magnews or call +44 (0)1869 238400

- **Hysteresis modeling:** The remanent magnetic flux in a transformer when it stops can be taken into account with a hysteresis model in Flux. This can be useful to simulate a transient study to determine the losses due to this phenomenon. Moreover, it could simulate accurately a transformer turning off and starting again with consideration of the remanent flux.
- **Advanced thermal coupling:** Analysing the real convection happening in the tank of a transformer filled with oil can provide the designer with highly accurate information about the temperature distribution and the cooling of the transformer. Coupling Flux magnetic results with AcuSolve for a CFD solution can enhance the quality of the design.
- **Mechanical analysis:** All currents involved in the transformer can cause multiple Laplace forces on the coils and generate noise and vibration in the power transformer. The accurate analysis of these effects could be performed through an export of forces to OptiStruct and a full vibro-acoustic solving to determine the mechanical parasitic behavior.
- **Modeling complex cases:** A real transformer contains hundreds of parts and most of the time needs to be simplified to be modeled. In order to directly mesh this heavy and complex assembly, powerful preprocessors such as HyperMesh or SimLab are able to deal with these geometries and generate a Nastran mesh that Flux can import. Studying big geometries is then possible and allows simulation of the full device.

Conclusion

The different tests that have been conducted gave a lot of information on the behavior and the characteristics of the power transformers. They allow the evaluation of different losses, and determination of the best configuration to design an efficient power transformer.

The modeling of transformers relies on a great set of tools and techniques to evaluate all electrical, thermal and mechanical quantities that can affect the behavior and the life of a transformer. All these solutions are made available by Finite Element modeling and can help engineers handling the design and analysis of power transformers.