Design
the Difference
with
Digital twin

Altair Technology Conference 2017

Lenovo HPC Solution
Cooling Technology

Lenovo

ATC 2017

How to measure Power Efficiency

- PUE

$$PUE = \frac{\text{Total Facility Power}}{\text{IT Equipment Power}}$$

  - **Power usage effectiveness** (**PUE**) is a measure of how efficiently a computer data center uses its power;
  - PUE is the ratio of total power used by a computer facility[1] to the power delivered to computing equipment.
  - Ideal value is 1.0
  - It does not take into account how IT power can be optimised

- ERE

$$ERE = \frac{\text{Total Facility Power} - T_{reuse}}{\text{IT Equipment Power}}$$

  - **Energy Reuse Effectiveness** measures how efficient a data center reuses the power dissipated by the computer
  - ERE is the ratio of total amount of power used by a computer facility[1] to the power delivered to computing equipment.
  - An ideal ERE is 0.0. If no reuse, ERE = PUE

Lenovo Choice of Cooling

Air Cooled

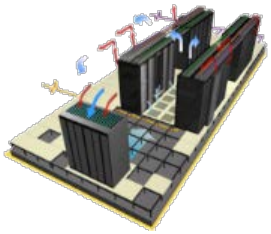

- Standard air flow with internal fans
- Fits in any datacenter
- Maximum flexibility
- Broadest choice of configurable options supported
- Supports Native Expansion nodes (Storage NeX, PCI NeX)

PUE ~2 – 1.5
ERE ~2 – 1.5

Choose for broadest choice of customizable options

Indirect Water Cooled

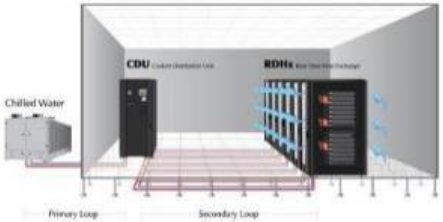

- Air cool, supplemented with RDHX door on rack
- Uses chilled water with economizer (18°C water)
- Enables extremely tight rack placement

PUE ~1.4 – 1.2
ERE ~ 1.4 – 1.2

Choose for compromise between flexibility and energy efficiency

Direct Water Cooled

- Direct water cooling without fans
- Higher performance per watt
- Free cooling (inlet up to 50°C water)
- **Energy re-use**
- Densest footprint and high TDP SKU
- Ideal for geos with high electricity costs and new data centers

PUE ~ 1.1
ERE < 1 (with hot water)

Choose for highest performance and energy efficiency

Next Generation Liquid Cooling

- Enable high performance / power processors – 165W - 205W+ CPUs
- Enable high performance memory with direct water cooling (3D Cross Point)
- Support wide inlet water range 10°C – 50°C
- Target > 95% heat recovery (Air 5°C - 40°C; Water 10°C – 50°C)
- Direct warm water cooled almost all system components
- Provide Rack (Chassis & Manifold) insulation
- Investigate solutions for water cooled power supplies

Improved Water Cooling Architecture for Purley

Improvements for 90% heat to water recovery

- Focus on maximizing efficiency for high (50°C) inlet water temperatures
- Direct water cooling of processors, memory, voltage regulation devices and IO devices (Network and Disk)
- Water circuit traverses all critical components to optimize cooling.

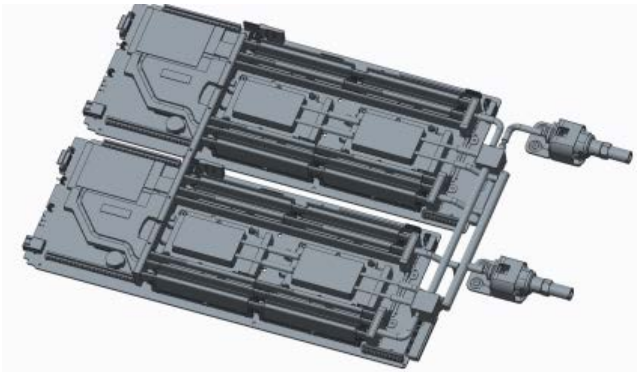

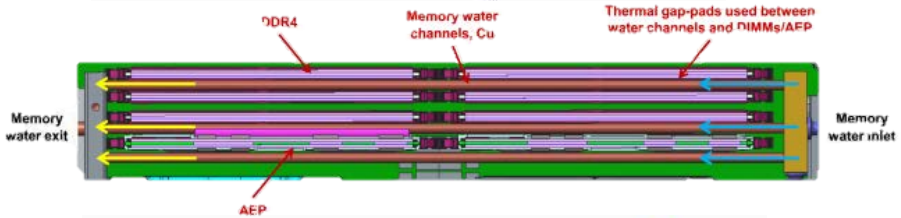

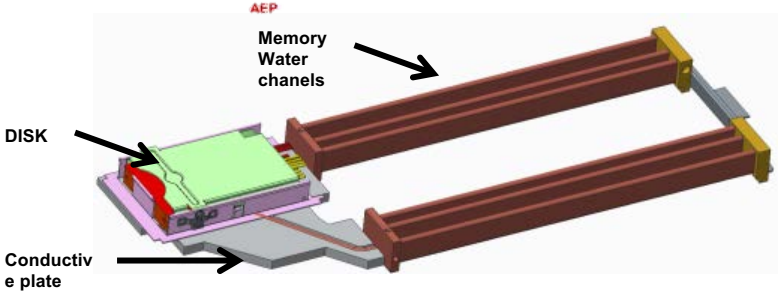

NeXtScale improvements for 95% heat capture

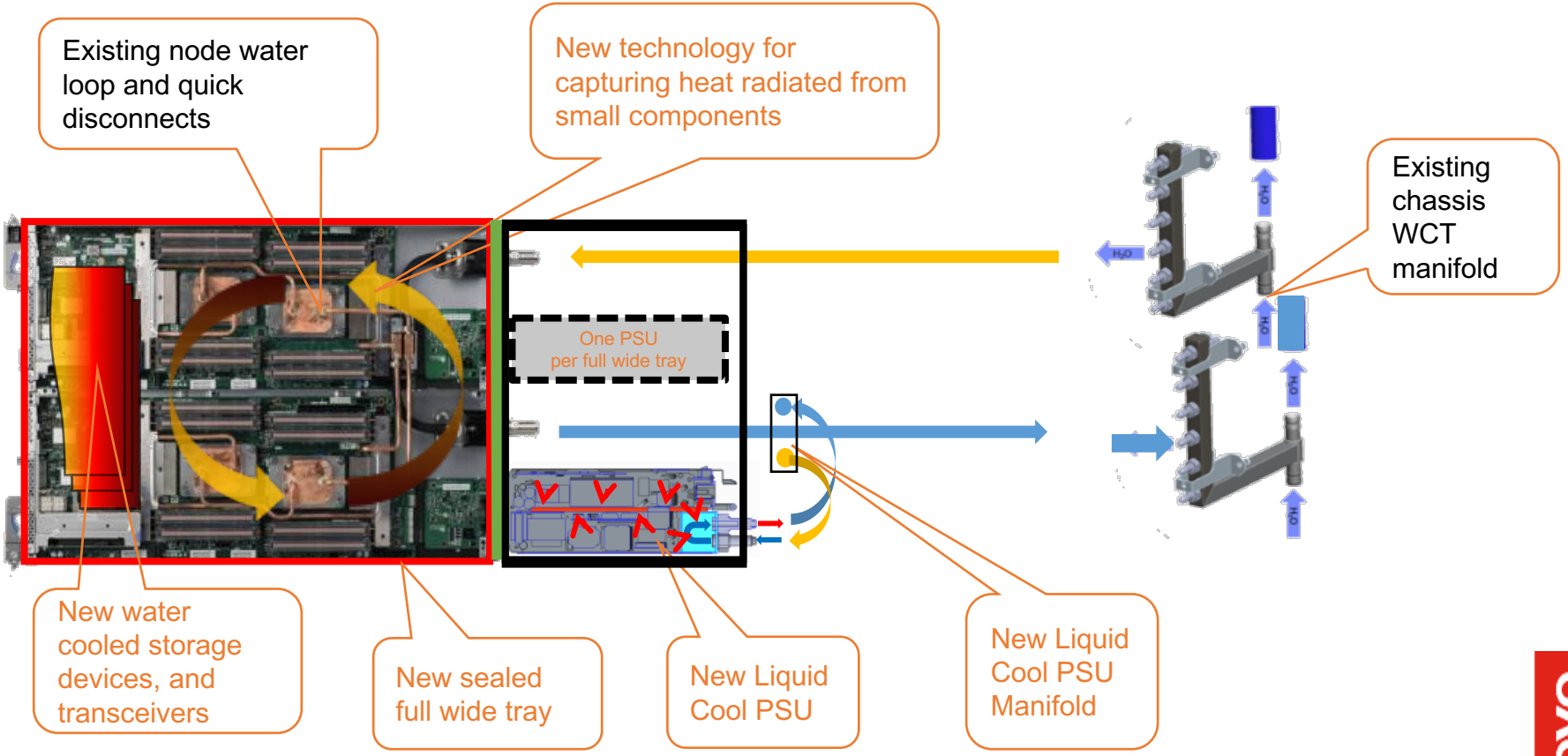

Power consumption, Junction Temperature and Cooling

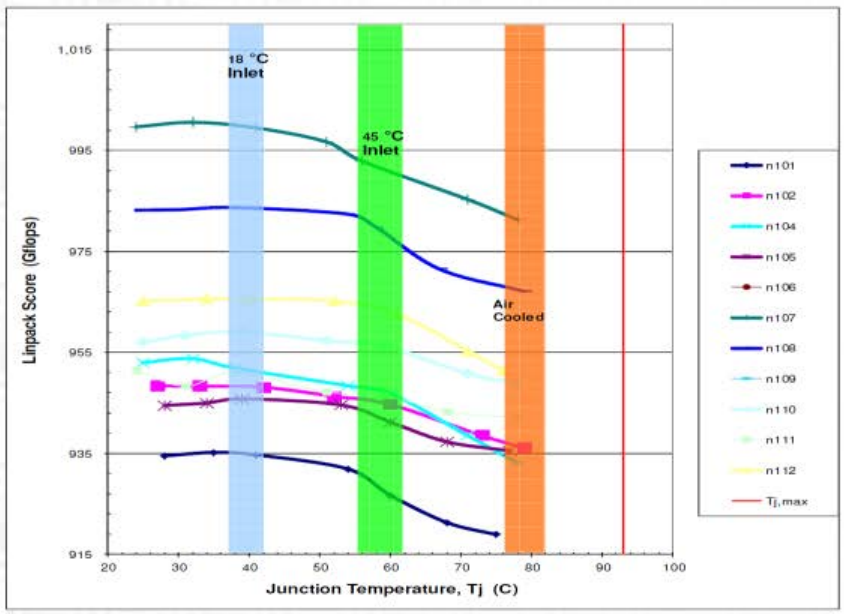

- Example: HPL scores across a range of temperatures:
  - 12 sample processors running on NeXtScale System WCT
- HPL scores remain mostly flat for junction temperatures in the range that water cooling operates.
- The HPL scores drop significantly when junction temperature is in range that air cooling operates.
- Conclusion: Water Cooling enables the highest performance possible for each processor SKU at any water inlet temperature under 45°C

* Vinod Kamath

DWC reduces Processor Temperature on Xeon 2697v4

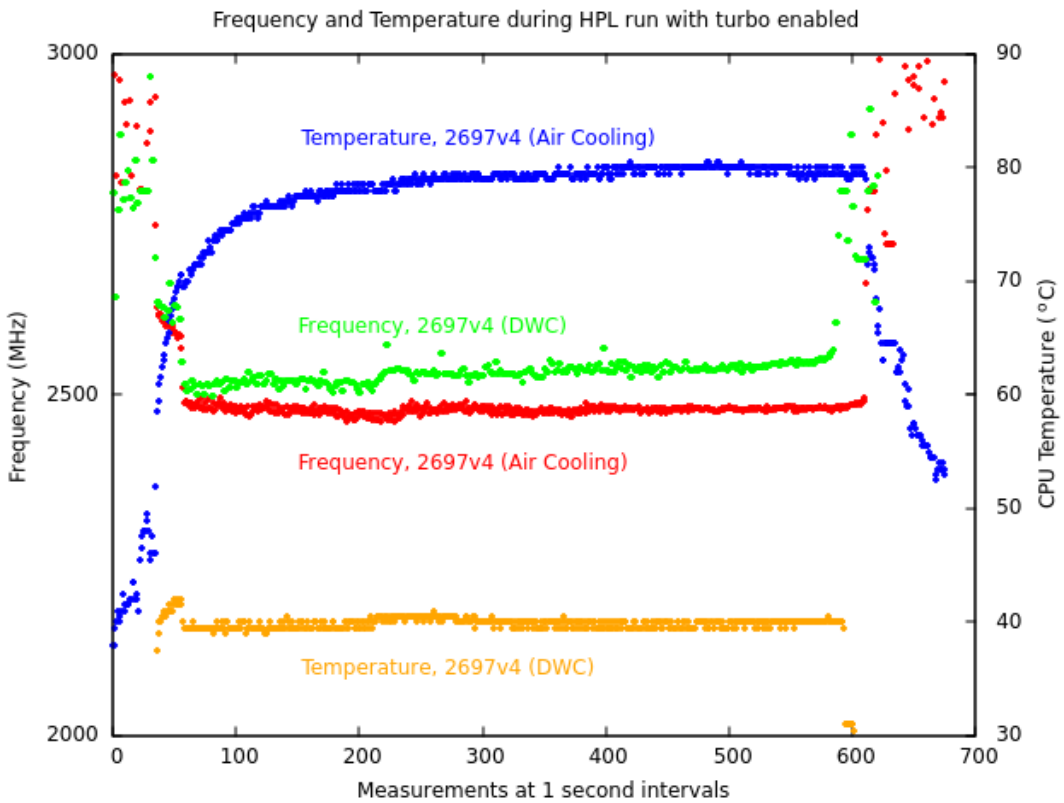

Conclusion: Direct Water Cooling lowers processor power consumption by about 5% and allows higher processor frequency.

NXT with 2 socket 2697v4, 128 GB 2400 MHz DIMM Inlet Water temperature is 28°C.

Air and DWC performance DC power on Xeon 2697v4

	Air-cooled			Water-cooled			Performance delta	Power delta
	Gigaflops	**Joules**	**Watts**	**Gigaflops**	**Joules**	**Watts**	**DWC vs Air**	**DWC vs Air**
Turbo On	1324	270445	415	1367	259284	409		
	1324	271667	417	1371	260659	412		
	1323	272016	417	1372	260572	412		
	1322	272485	418	1372	260789	413		
	1322	272525	418	1374	260513	413		
average	1323		417	1371		412	**3.3%**	**-1.4%**
	Gigaflops	**Joules**	**Watts**	**Gigaflops**	**Joules**	**Watts**		
Turbo Off	1241	285224	407	1251	270234	387		
	1241	285867	408	1252	270248	388		
	1241	285739	408	1252	270381	388		
	1240	285884	408	1251	270285	387		
	1240	286071	408	1250	270583	388		
average	1241		407	1251		388	**0.8%**	**-4.8%**

Conclusion:
With Turbo OFF, Direct Water Cooling reduces power by 5%
With Turbo ON, it increases performance by 3% and still reduces power by 1%

DC energy is measured through aem DC energy accumulator

2 X 3 petaflops SuperMUC systems at LRZ Phase 1 & Phase 2

Phase 1

Ranked 27 and 28 in TOP500 June 2016

- Fastest computer in Europe on TOP500, June 2012
  - 9324 nodes with 2 Intel Sandy Bridge EP CPUs
  - HPL = 2.9 petaflop/s
  - InfiniBand FDR10 interconnect
  - Large File Space for multiple purpose
    - 10 Petabyte File Space based on IBM GPFS with 200 GB/s I/O bandwidth
- Innovative technology for energy effective computing
  - Hot Water Cooling (45°C)
  - Energy Aware Scheduling
- Most energy efficient high-end HPC system
  - PUE 1.1
  - **Total power consumption over 5 years to be reduced by ~ 37% from 27.6 M€ to 17.4 M€**

Phase 2

- Acceptance completed
  - 3096 nx360 M5 compute nodes Haswell EP CPUs
  - HPL = 2.8 petaflop/s
  - Direct Hot Water Cooled, Energy Aware Scheduling
  - InfiniBand FDR14
  - GPFS, 10 x GSS26, 7.5 PB capacity , 100 GB/s I/O bandwidth

CooLMUC-2

- **Lenovo NeXtScale Water Cool Technology (WCT) system**
  - ✓ Water inlet temperatures 50 °C
  - ✓ All season chiller-less cooling
  - ✓ 384 compute nodes
  - ✓ 466 teraflop/s peak performance

Energy Reuse Effectiveness (ERE) measures how efficient a data center reuses the power dissipated by the computer

- **SorTech Absorbtion Chillers**
  - ✓ based of zeolite coated metal fiber heat exchangers
  - ✓ a factor 3 higher than current chillers based on silica gel
  - ✓ COP = 60%
  - ✓ Total electricity reduced by ~60%

$$ERE = \frac{\text{Total Facility Power} - T_{reuse}}{\text{IT Equipment Power}}$$

Leibniz Supercomputing Centre

Re-Use of Waste Heat

Leibniz Supercomputing Centre

Thank you

Different is better