Altair Inspire 를 활용한 자작자동차 부품 최적설계.

한양대학교 자작자동차동아리 팀 RACE
-김범수, 민동혁

목차

1

업라이트 너클 최적설계

주제 선정 배경

2023 KSAE 대회를 위한 차량 설계
현가하질량의 감소를 통한 차량의 동적성능 향상
-> 너클 감량을 통한 현가하질량 최소화

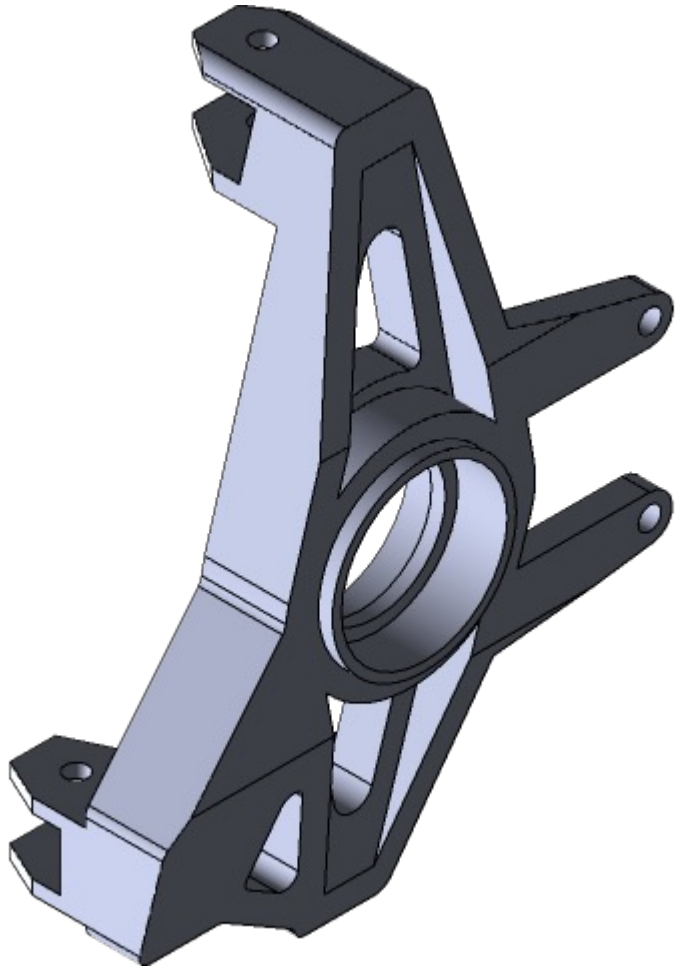

1 업라이트 너클 최적설계

첫번째 디자인 스페이스

차량의 세팅값 설계에 맞게 볼트,너트등 과
간섭이 안나도록 디자인 스페이스 형상 설계

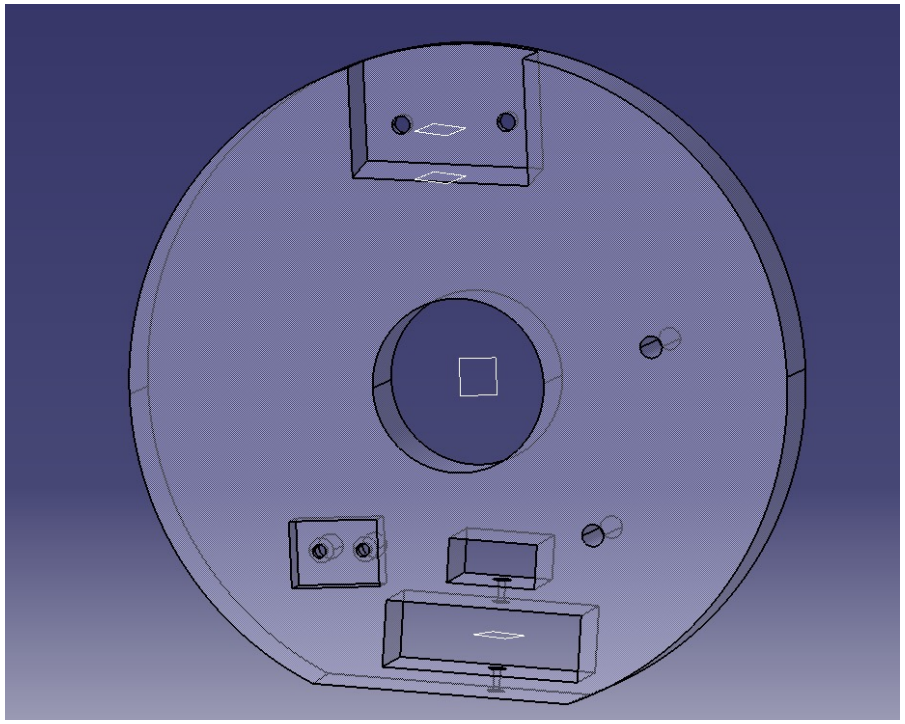

1 업라이트 너클 최적설계

차량의 기본 설계 및 에어로 Down Force를 바탕으로 그 값들을 대입하여 너클에 가해지는 Bearing Force 및 각 상황들의 하중을 엑셀로 구현 함.

-> 이러한 Load Cases 를 바탕으로 Altair Inspire 의 Optimize 를 이용하여 최적설계 진행

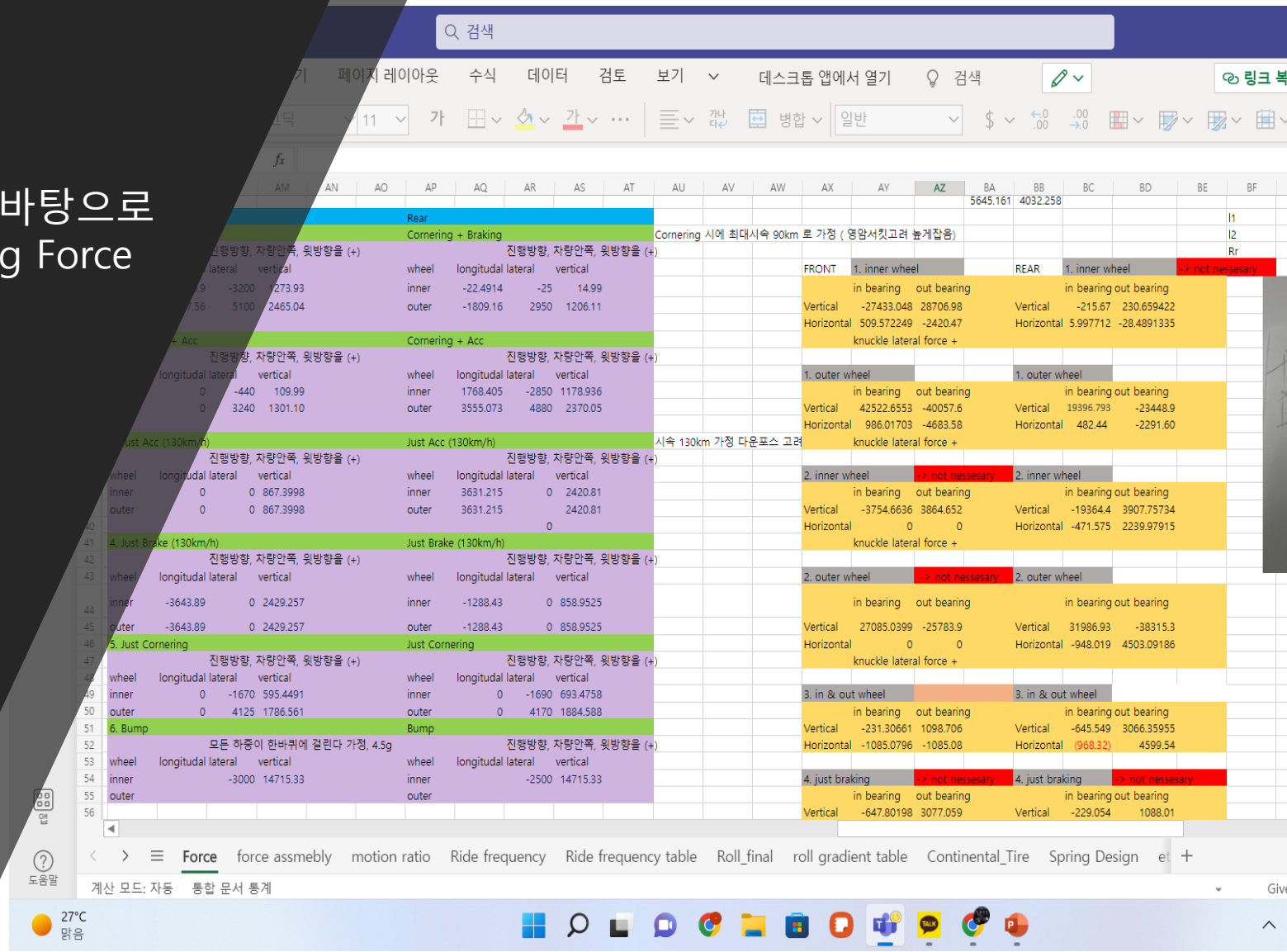

Front Upright Assembly.stmod - Altair Inspire 2021.2.3 - OptiStruct

File Edit View Sketch Geometry PolyMesh PolyNURBS Structure Motion Manufacture Print3D Custom Custom

Files Measure Move Home | Variables | Fasteners Joints Connectors Spot Welds Contacts Connections | Loads Disps Accels Gravity Temps COG Materials Masses Systems Shape Controls Bead Patterns Setup | Analyze Optimize Run

Model

Object	Mass
Steering bracket.1	**
Front Upper Arm Brac...	**
Front Knuckle Analysi...	**
Front Knuckle ...	
Front Upright ...	
Part 3	**
Part 4	**
Part 5	**
Part 6	**
Part 8	**
Part 9	**
Part 10	**
Point 6	**
Point 5	**
Point 4	**
Part 7	**
Load Cases	
All Loads, Displacem...	
Cor + Br in wheel	
Cor + Br out wheel	
Cor + Acc in wheel	
Cor + Acc out wheel	
Just Cor	
Bump	
arm to knuckle 1	
arm to knuckle 2	
arm to knuckle 3	
arm to knuckle 4	
Connectors	
Global References	

Property Editor

Name	Value
General	
Name	Bump
Scale Factor	1
Appearance	
Visible	☑
Behavior	
Current	☐

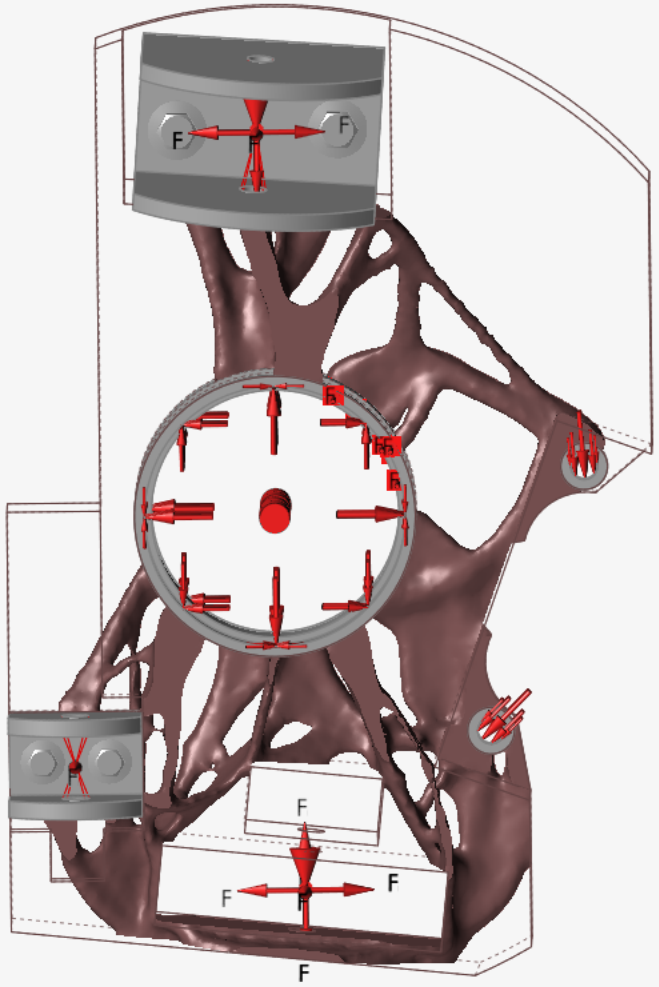

Shape Explorer

Switch to Design Spaces

Front Upright Assembly2 Ma...

Topology

Smooth Results

Analyze | Fit PolyNURBS

Compare Results

Z X Y RIGHT

MKS (m kg N s)

28°C 비 약간 오전 10:02 2022-07-20

Front Upright Assembly.stmod - Altair Inspire 2021.2.3 - OptiStruct

File Edit View Sketch Geometry PolyMesh PolyNURBS Structure Motion Manufacture Print3D Custom Custom

Home: Files, Measure, Move, Variables

Create: Primitive, Fit, Wrap, Pave

Modify: Move Bodies, Mirror Bodies, +/-, Split, Bridge, Sharpen, Repair, Adjust, Shape

Model

Object	Mass
Steering bracket.1	0.042691 kg
Front Upper Arm Brac...	0.13305 kg
Front Knuckle Analysi...	0.27355 kg
Front Knuckle ...	
Front Upright ...	
Part 3	0.002032 kg
Part 4	0.002032 kg
Part 5	0.0014514 kg
Part 6	0.0014514 kg
Part 8	0.092046 kg
Part 9	0.0013696 kg
Part 10	0.0013696 kg
Point 6	**
Point 5	**
Point 4	**
Part 7	**
Load Cases	
All Loads, Displacem...	
Cor + Br in wheel	
Cor + Br out wheel	
Cor + Acc in wheel	
Cor + Acc out wheel	
Just Cor	
Bump	
arm to knuckle 1	
arm to knuckle 2	
arm to knuckle 3	
arm to knuckle 4	
Connectors	
Global References	

Property Editor

Name	Value

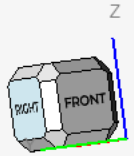

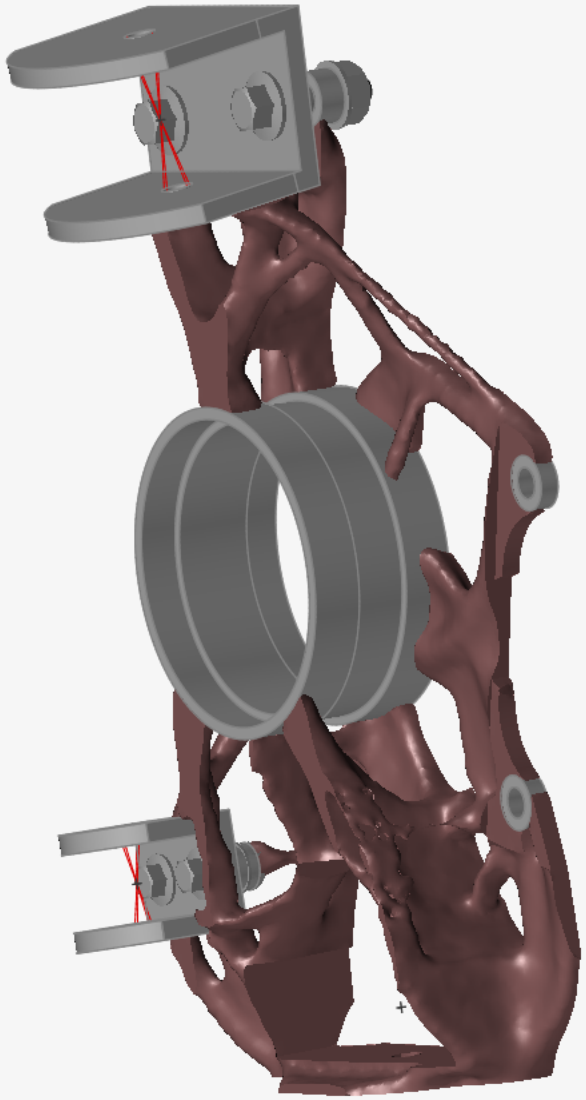

MKS (m kg N s)

28°C 비 약간 오전 10:23 2022-07-20

Front Upright Assembly.stmod - Altair Inspire 2021.2.3 - OptiStruct

File Edit View Sketch Geometry PolyMesh PolyNURBS Structure Motion Manufacture Print3D Custom Custom

Home: Files, Measure, Move, Variables

Create: Primitive, Fit, Wrap, Pave

Modify: Move Bodies, Mirror Bodies, +/-, Split, Bridge, Sharpen, Repair, Adjust, Shape

Model

Object	Mass
Steering bracket.1	0.042691 kg
Front Upper Arm Brac...	0.13305 kg
Front Knuckle Analysi...	0.27355 kg
Front Knuckle ...	
Front Upright ...	
Part 3	0.002032 kg
Part 4	0.002032 kg
Part 5	0.0014514 kg
Part 6	0.0014514 kg
Part 8	0.092046 kg
Part 9	0.0013696 kg
Part 10	0.0013696 kg
Point 6	**
Point 5	**
Point 4	**
Part 7	**
Load Cases	
All Loads, Displacem...	
Cor + Br in wheel	
Cor + Br out wheel	
Cor + Acc in wheel	
Cor + Acc out wheel	
Just Cor	
Bump	
arm to knuckle 1	
arm to knuckle 2	
arm to knuckle 3	
arm to knuckle 4	
Connectors	
Global References	

Property Editor

Name	Value

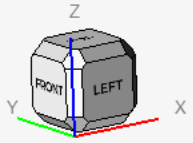

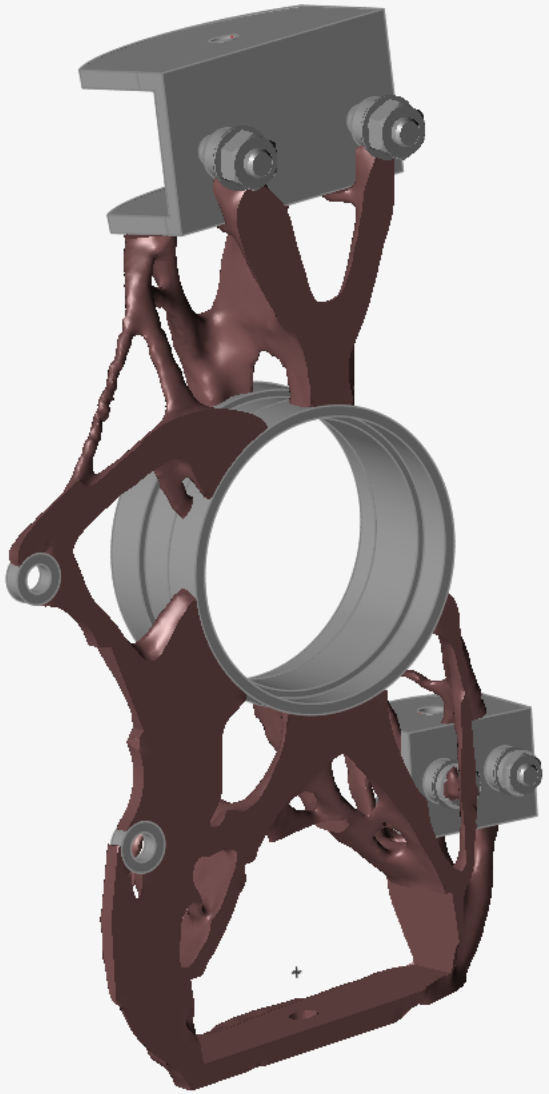

MKS (m kg N s)

28°C 비 약간 오전 10:24 2022-07-20

Front Upright Assembly.stmod - Altair Inspire 2021.2.3 - OptiStruct

File Edit View Sketch Geometry PolyMesh PolyNURBS Structure Motion Manufacture Print3D Custom Custom

Files Measure Move Home | Variables | Fasteners Joints Connectors Spot Welds Contacts Connections | Loads Disps Accels Gravity Temps COG Materials Masses Systems Shape Controls Bead Patterns Setup | Analyze Optimize Run

Model

Object	Mass
Front Upright Assembly	**
Steering bracket.1	0.042691 kg
Front Upper Arm Brac...	0.13305 kg
Front Knuckle Analysi...	0.27355 kg
Front Knuckle ...	
Front Upright ...	
Part 3	0.002032 kg
Part 4	0.002032 kg
Part 5	0.0014514 kg
Part 6	0.0014514 kg
Part 8	0.092046 kg
Part 9	0.0013696 kg
Part 10	0.0013696 kg
Point 6	**
Point 5	**
Point 4	**
Part 7	**
Load Cases	
All Loads, Displacem...	
Cor + Br in wheel	
Cor + Br out wheel	
Cor + Acc in wheel	
Cor + Acc out wheel	
Just Cor	
Bump	
arm to knuckle 1	
arm to knuckle 2	
arm to knuckle 3	
arm to knuckle 4	
Connectors	

Property Editor

Name	Value

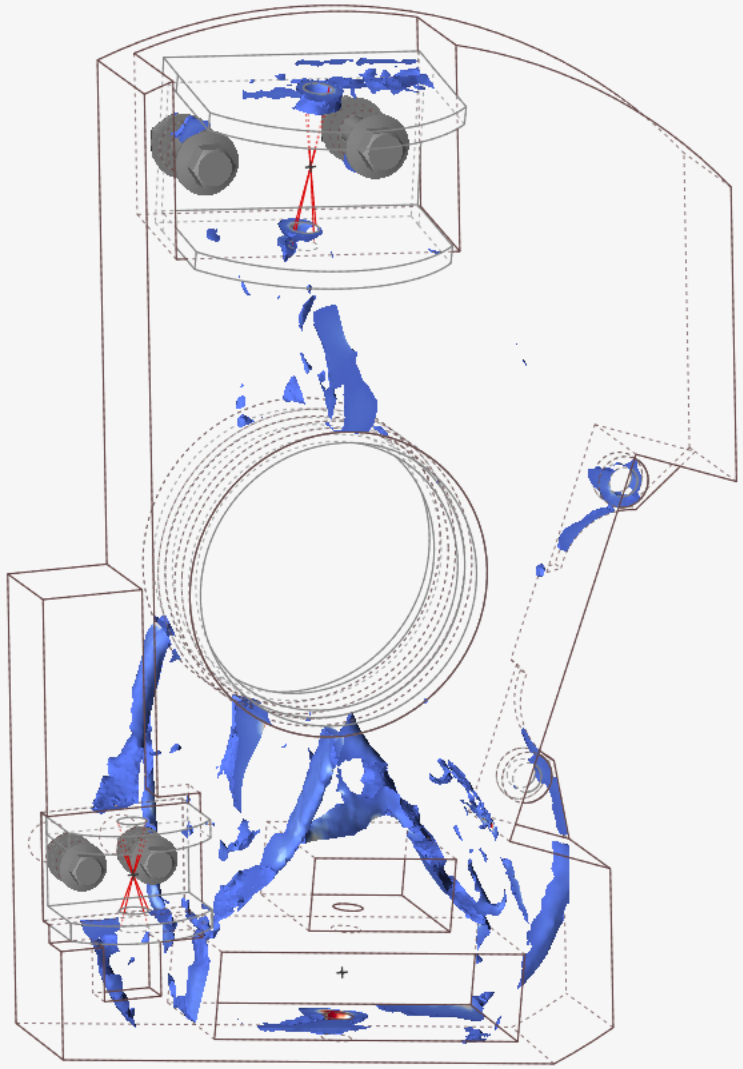

Analysis Explorer

Run: Front Upright Assembly2 Max

Load Case: Load Case 1

Result Types: von Mises Stress

von Mises Stress:

Max: 7.913e+08 Pa
4.137e+08 Pa
3.723e+08 Pa
3.310e+08 Pa
2.896e+08 Pa
2.482e+08 Pa
2.069e+08 Pa
1.655e+08 Pa
1.241e+08 Pa
8.274e+07 Pa
4.137e+07 Pa
2.910e+03 Pa
Min: 2.910e+03 Pa

Show

Callouts

Min/Max

Compare Results

1 / 12

MKS (m kg N s)

28°C 비 약간 오전 10:30 2022-07-20

Front Upright Assembly.stmod - Altair Inspire 2021.2.3 - OptiStruct

File Edit View Sketch Geometry PolyMesh PolyNURBS Structure Motion Manufacture Print3D Custom Custom

Files Measure Move Variables Fasteners Joints Connectors Spot Welds Contacts Loads Disps Accels Gravity Temps COG Materials Masses Systems Shape Controls Bead Patterns Analyze Optimize

Home Connections Setup Run

Model

Object	Mass
Front Upright Assembly	**
Steering bracket.1	0.042691 kg
Front Upper Arm Brac...	0.13305 kg
Front Knuckle Analysi...	0.27355 kg
Front Knuckle ...	
Front Upright ...	
Part 3	0.002032 kg
Part 4	0.002032 kg
Part 5	0.0014514 kg
Part 6	0.0014514 kg
Part 8	0.092046 kg
Part 9	0.0013696 kg
Part 10	0.0013696 kg
Point 6	**
Point 5	**
Point 4	**
Part 7	**
Load Cases	
All Loads, Displacem...	
Cor + Br in wheel	
Cor + Br out wheel	
Cor + Acc in wheel	
Cor + Acc out wheel	
Just Cor	
Bump	
arm to knuckle 1	
arm to knuckle 2	
arm to knuckle 3	
arm to knuckle 4	
Connectors	

Property Editor

Name	Value

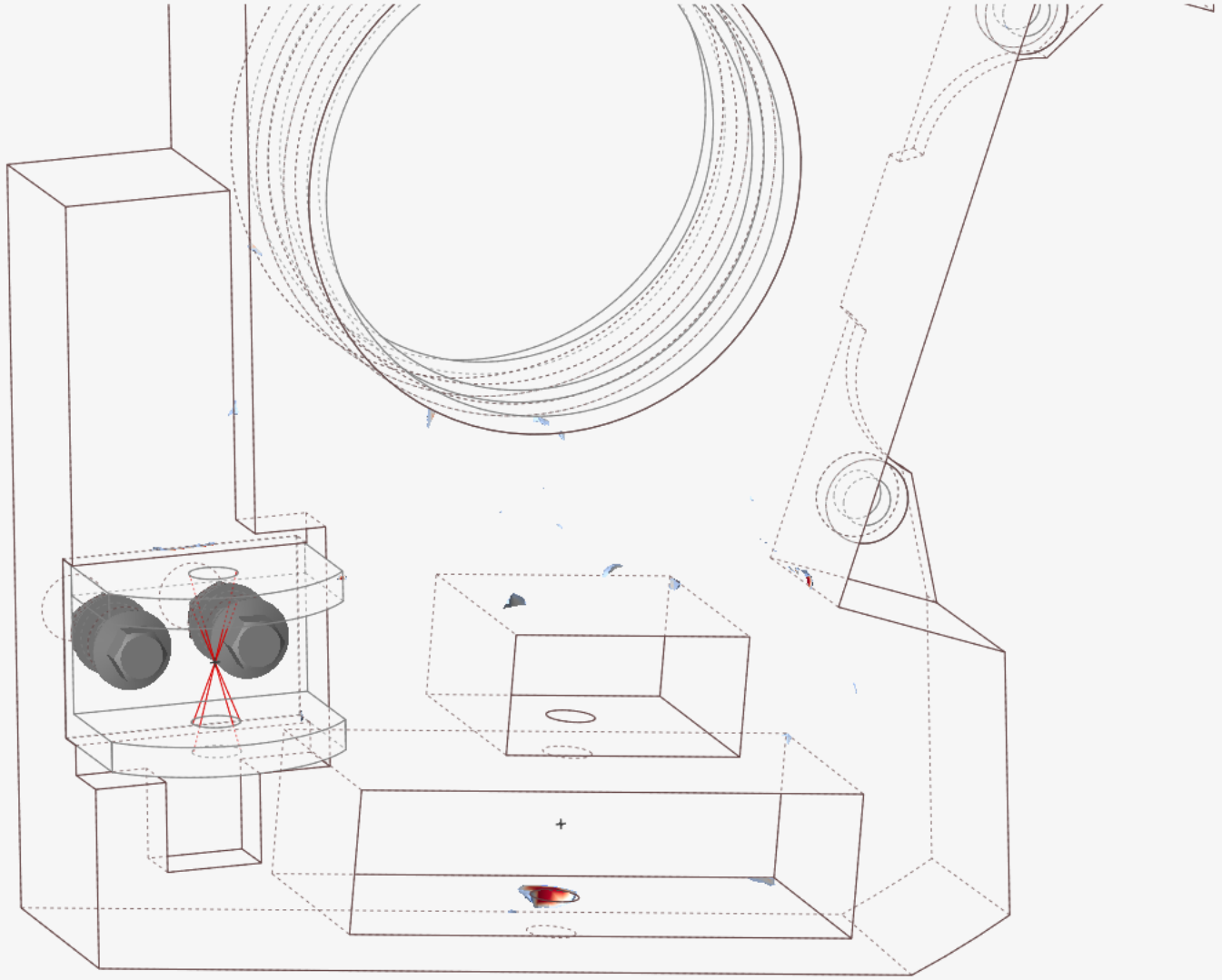

1 / 12

Analysis Explorer

Run: Front Upright Assembly2 Max

Load Case: Load Case 1

Result Types: von Mises Stress

von Mises Stress:

Max: 7.913e+08 Pa
4.137e+08 Pa
3.723e+08 Pa
3.310e+08 Pa
2.896e+08 Pa
2.482e+08 Pa
2.069e+08 Pa
1.655e+08 Pa
1.241e+08 Pa
8.274e+07 Pa
4.137e+07 Pa
2.910e+03 Pa
Min: 2.910e+03 Pa

Show

Callouts

Min/Max

Compare Results

MKS (m kg N s)

28°C 비 약간 오전 10:31 2022-07-20

1 업라이트 너클 최적설계

메탈 3D프린팅 업체와 연락하여 무상 후원을 기대하고 Optimize 형상을 손보고 메탈 프린팅을 할 계획이었으나, 생각보다 비싼 가격으로 인하여 후원 협상이 무산되었다.

-> 3축 CNC 머신 가공이 용이하게 Inspire 의 Single draw 및 Extrusion 기능을 활용하여 다시 Topology 진행.

Model.stmod - Altair Inspire 2021.2.3 - OptiStruct

File Edit View Sketch Geometry PolyMesh PolyNURBS Structure Motion Manufacture Print3D Custom Custom

Files Measure Move Home | Variables | Fasteners Joints Connectors Spot Welds Contacts Connections | Loads Disps Accels Gravity Temps COG Materials Masses Systems Shape Controls Bead Patterns Setup | Analyze Optimize Run

Model

Object	Mass
Model	**
Steering bracket.1	**
Front Upper Arm Brac...	**
Front Knuckle Analysi...	**
Front Knuckle ...	
Front Upright ...	
Part 1	**
Part 2	**
Part 3	**
Part 4	**
Part 5	**
Part 6	**
Part 7	**
Part 8	**
Part 9	**
Point 1	**
Point 2	**
Point 3	**
Load Cases	
All Loads, Displacem...	
Support 1	
Support 2	
Support 3	
Support 4	
steering	
caliper mount 1	
caliper mount 2	
Force 4	
Force 5	
Force 6	

Property Editor

Name	Value
General	
Name	Front Knuckle Analy...
Behavior	
Active	☑

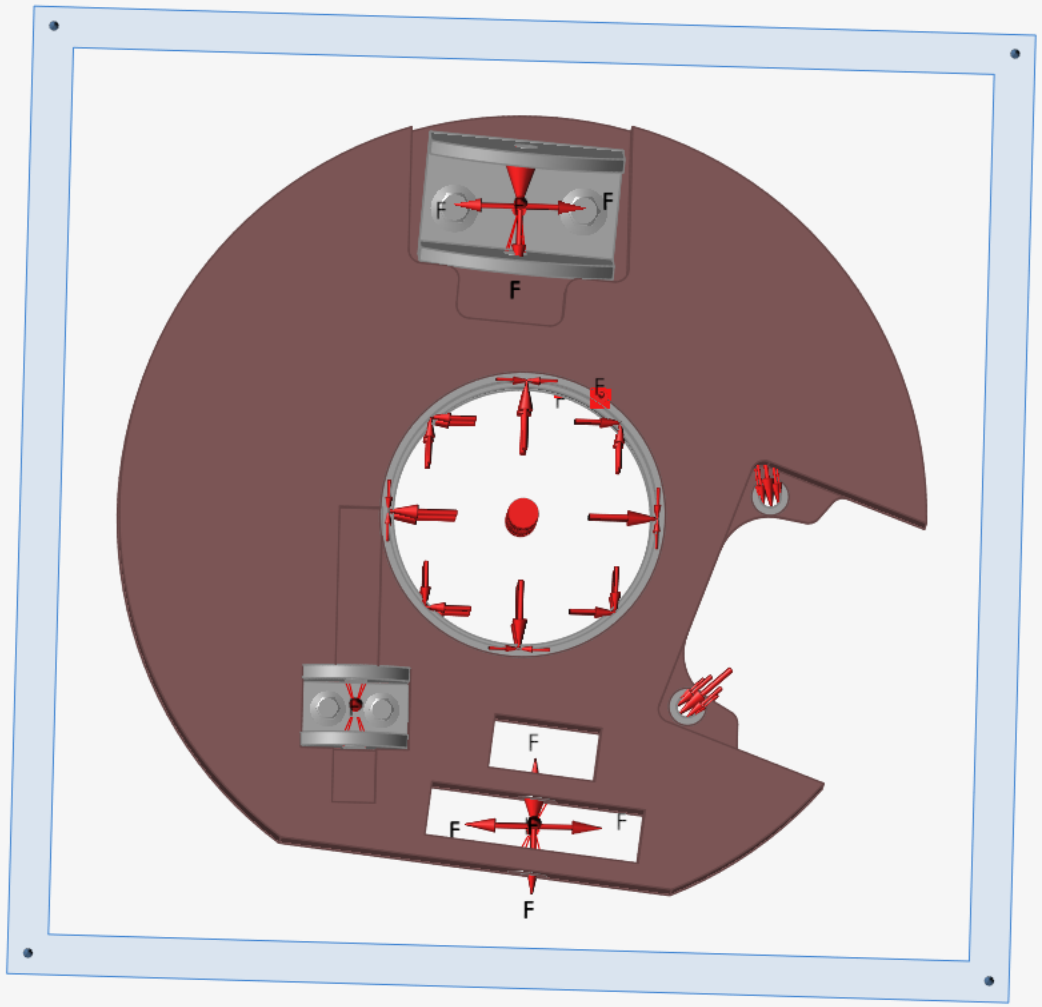

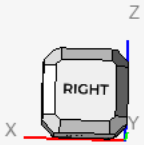

MKS (m kg N s)

23°C 비 한 오전 1:01 2022-07-24

Model.stmod - Altair Inspire 2021.2.3 - OptiStruct

File Edit View Sketch Geometry PolyMesh PolyNURBS Structure Motion Manufacture Print3D Custom Custom

Files Measure Move Variables Fasteners Joints Connectors Spot Welds Contacts Loads Disps Accels Gravity Temps COG Materials Masses Systems Shape Controls Bead Patterns Analyze Optimize

Home Connections Setup Run

Model

Object	Mass
Model	**
Steering bracket.1	**
Front Upper Arm Brac...	**
Front Knuckle Analysi...	**
Front Knuckle ...	
Front Upright ...	
Part 1	**
Part 2	**
Part 3	**
Part 4	**
Part 5	**
Part 6	**
Part 7	**
Part 8	**
Part 9	**
Point 1	**
Point 2	**
Point 3	**
Load Cases	
All Loads, Displacem...	
Support 1	
Support 2	
Support 3	
Support 4	
steering	
caliper mount 1	
caliper mount 2	
Force 4	
Force 5	
Force 6	

Property Editor

Name	Value
General	
Name	Front Knuckle Analy...
Behavior	
Active	☑

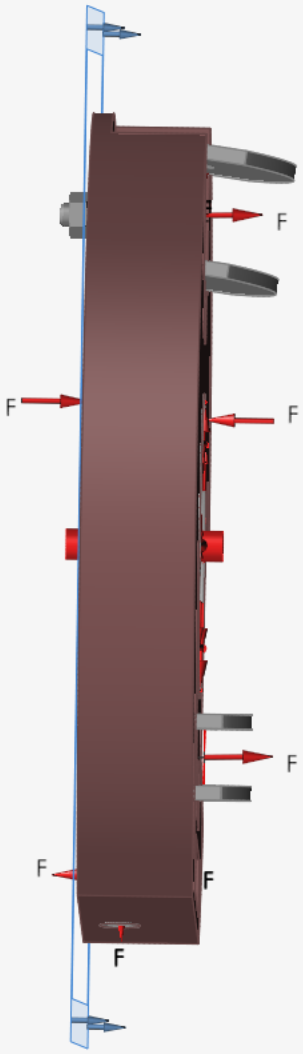

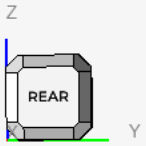

MKS (m kg N s)

23°C 비 한 오전 1:00 2022-07-24

Model.stmod - Altair Inspire 2021.2.3 - OptiStruct

File Edit View Sketch Geometry PolyMesh PolyNURBS Structure Motion Manufacture Print3D Custom Custom

Files Measure Move Variables Fasteners Joints Connectors Spot Welds Contacts Loads Disps Accels Gravity Temps COG Materials Masses Systems Shape Controls Bead Patterns Analyze Optimize

Home Connections Setup Run

Model

Object	Mass
Model	**
Steering bracket.1	**
Front Upper Arm Brac...	**
Front Knuckle Analysi...	0.45953 kg
Front Knuckle ...	
Front Upright ...	
Part 1	**
Part 2	**
Part 3	**
Part 4	**
Part 5	**
Part 6	**
Part 7	**
Part 8	**
Part 9	**
Point 1	**
Point 2	**
Point 3	**
Load Cases	
All Loads, Displacem...	
Support 1	
Support 2	
Support 3	
Support 4	
steering	
caliper mount 1	
caliper mount 2	
Force 4	
Force 5	
Force 6	

Property Editor

Name	Value
General	
Name	Front Knuckle Analy...
Behavior	
Active	☐

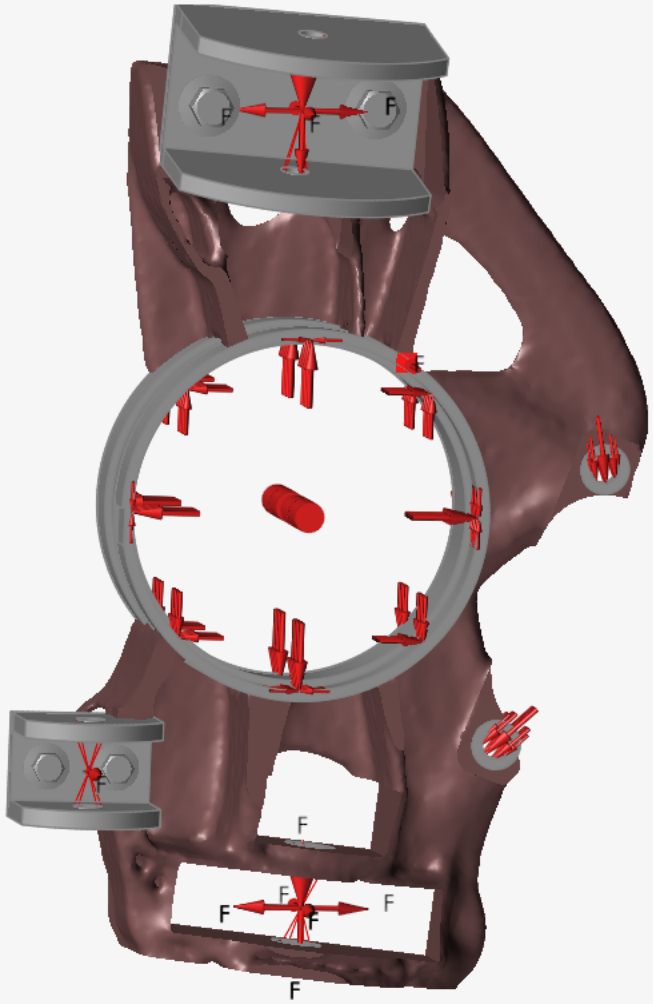

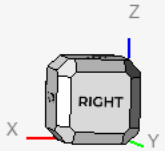

MKS (m kg N s)

23°C 비 한 오전 1:01 2022-07-24

1 업라이트 너클 최적설계

Single Draw Topology 형상을 통한 1차 살빼기

-> Analyze 진행

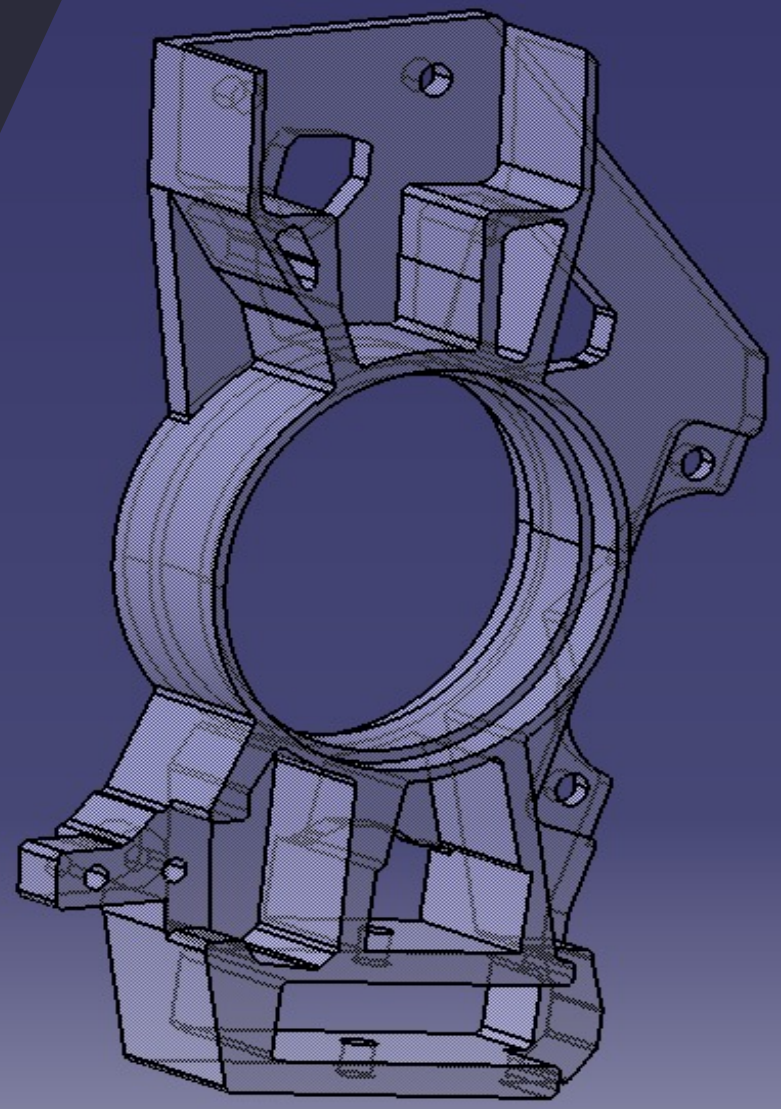

Front Upright Assembly 3.stmod - Altair Inspire 2021.2.3 - OptiStruct

File Edit View Sketch Geometry PolyMesh PolyNURBS Structure Motion Manufacture Print3D Custom Custom

Files Measure Move Home | Variables | Fasteners Joints Connectors Spot Welds Contacts Connections | Loads Disps Accels Gravity Temps COG Materials Masses Systems Shape Controls Bead Patterns Setup | Analyze Optimize Run

Model

Object	Mass
Front Upright Assembly 3	**
Steering bracket.1	**
Front Upper Arm Brac...	**
Front Knuckle Analysi...	**
Part 1	**
Part 2	**
Part 3	**
Part 4	**
Part 5	**
Part 6	**
Part 7	**
Part 8	**
Point 1	**
Point 2	**
Point 3	**
Part 9	**
Load Cases	
All Loads, Displacem...	
Cor + Brake front inne...	
Cor + Brake front oute...	
bump	
Brake	
acc	
arm to knuckle 1	
arm to knuckle 2	
arm to knuckle 3	
arm to knuckle 4	
Shape Controls	
Draw 1	
Connectors	

Property Editor

Name	Value

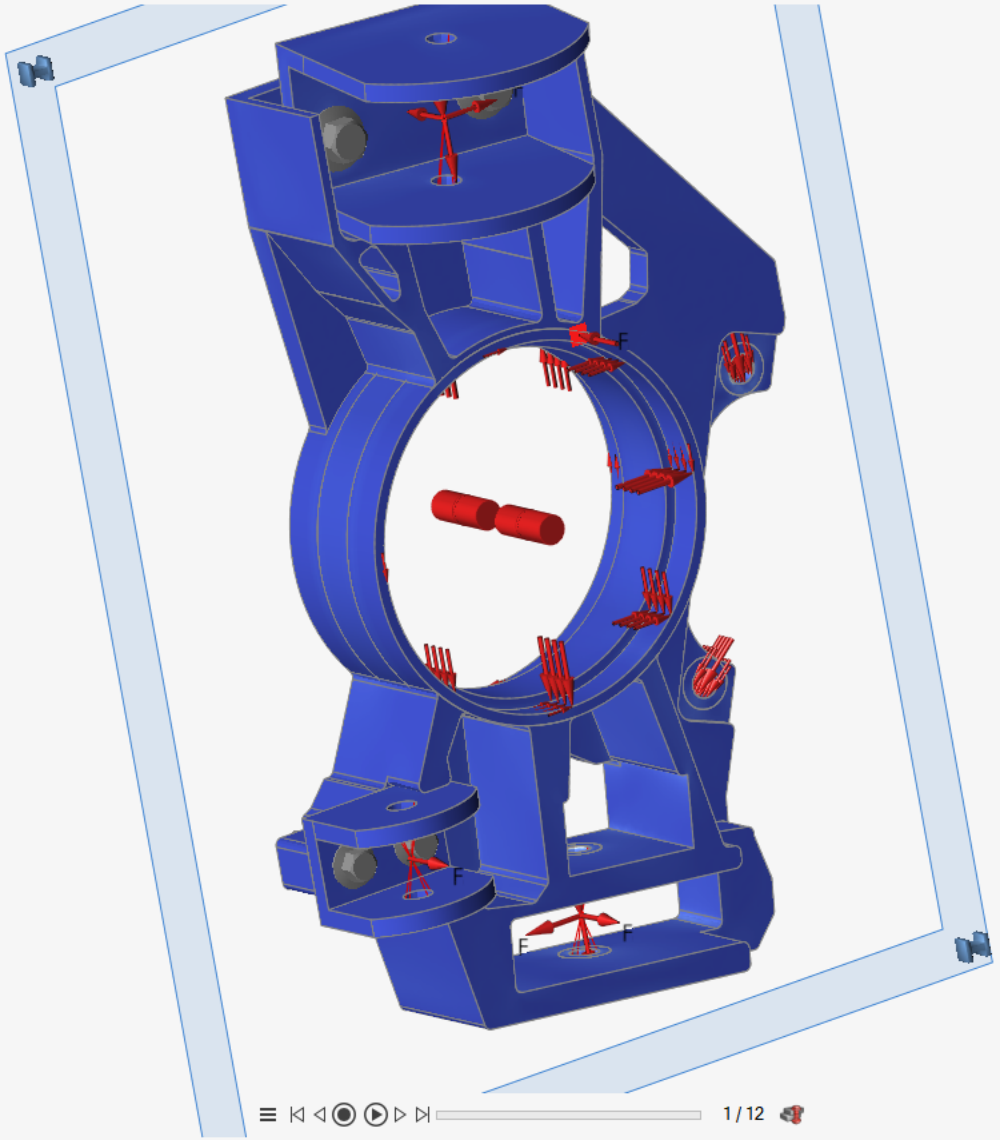

Analysis Explorer

Run: Front Upright Assembly 3 (1)

Load Case: Cor + Brake front inner wheel

Result Types: von Mises Stress

von Mises Stress:

Max: 4.618e+08 Pa

4.618e+08 Pa
4.156e+08 Pa
3.694e+08 Pa
3.233e+08 Pa
2.771e+08 Pa
2.309e+08 Pa
1.847e+08 Pa
1.385e+08 Pa
9.236e+07 Pa
4.618e+07 Pa
5.607e+03 Pa

Min: 5.607e+03 Pa

Show

Callouts

Min/Max

Compare Results

MKS (m kg N s)

22°C 비 약간 오전 2:35 2022-07-24

Front Upright Assembly 3.stmod - Altair Inspire 2021.2.3 - OptiStruct

File Edit View Sketch Geometry PolyMesh PolyNURBS Structure Motion Manufacture Print3D Custom Custom

Files Measure Move Home | Variables | Fasteners Joints Connectors Spot Welds Contacts Connections | Loads Disps Accels Gravity Temps COG Materials Masses Systems Shape Controls Bead Patterns Setup | Analyze Optimize Run

Model

Object	Mass
Front Upright Assembly 3	**
Steering bracket.1	**
Front Upper Arm Brac...	**
Front Knuckle Analysi...	**
Part 1	**
Part 2	**
Part 3	**
Part 4	**
Part 5	**
Part 6	**
Part 7	**
Part 8	**
Point 1	**
Point 2	**
Point 3	**
Part 9	**
Load Cases	
All Loads, Displacem...	
Cor + Brake front inne...	
Cor + Brake front oute...	
bump	
Brake	
acc	
arm to knuckle 1	
arm to knuckle 2	
arm to knuckle 3	
arm to knuckle 4	
Shape Controls	
Draw 1	
Connectors	

Property Editor

Name	Value

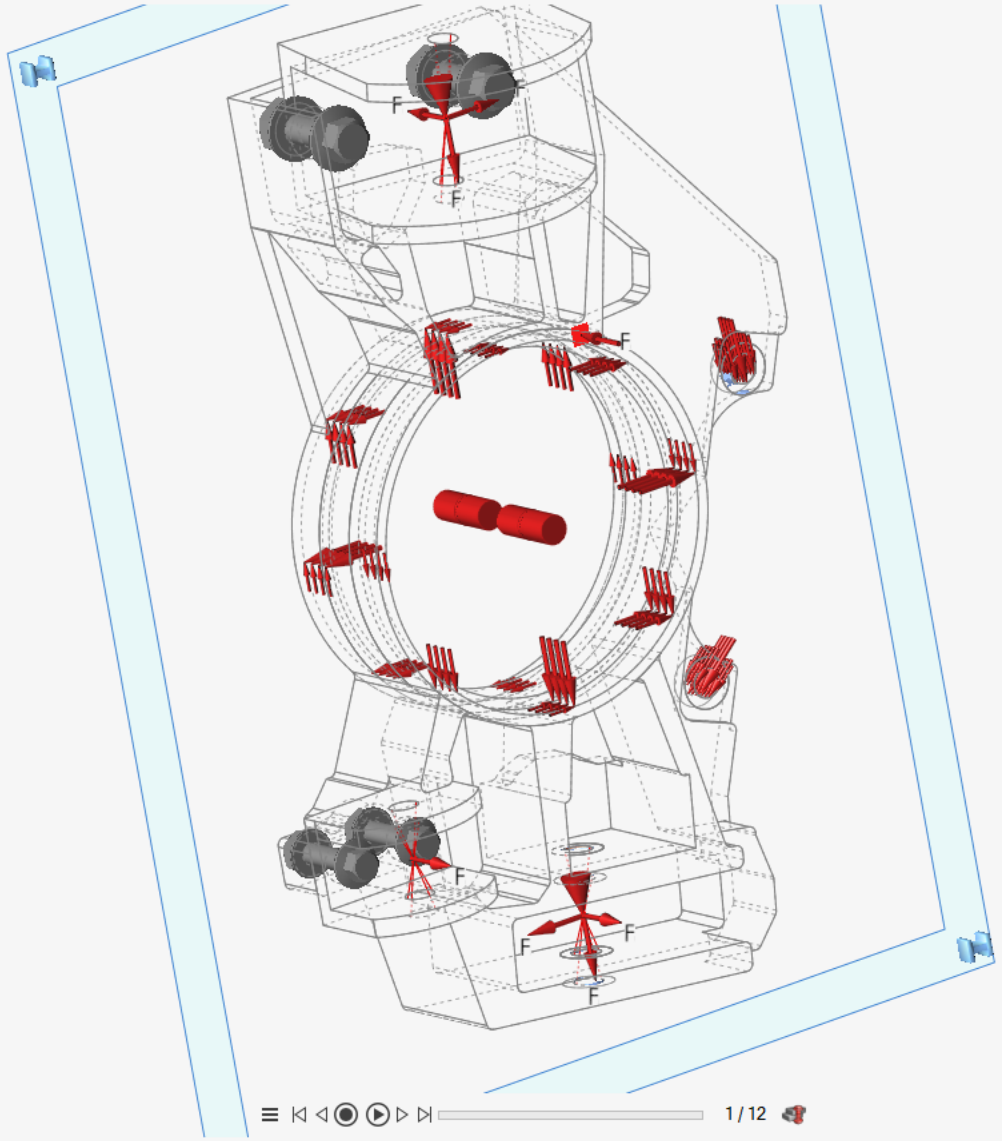

Analysis Explorer

Run: Front Upright Assembly 3 (1)

Load Case: Cor + Brake front inner wheel

Result Types: Percent of Yield

Percent of Yield:

Max: 111.62%

100.00%
90.00%
80.00%
70.00%
60.00%
50.00%
40.00%
30.00%
20.00%
10.00%
0.00%

Min: 0.00%

Show

Callouts

Min/Max

Compare Results

MKS (m kg N s)

22°C 비 약간 오전 2:36 2022-07-24

1 업라이트 너클 최적설계

브레이크 캘리퍼 마운트 및 로워암
포인트에 응력이 집중, 그 부분의 두께를 늘림.

3축 CNC가공 용이하게 Extrusion의 조건을 주고
Topology를 진행.

이를 바탕으로 2차 살빼기 진행. ->

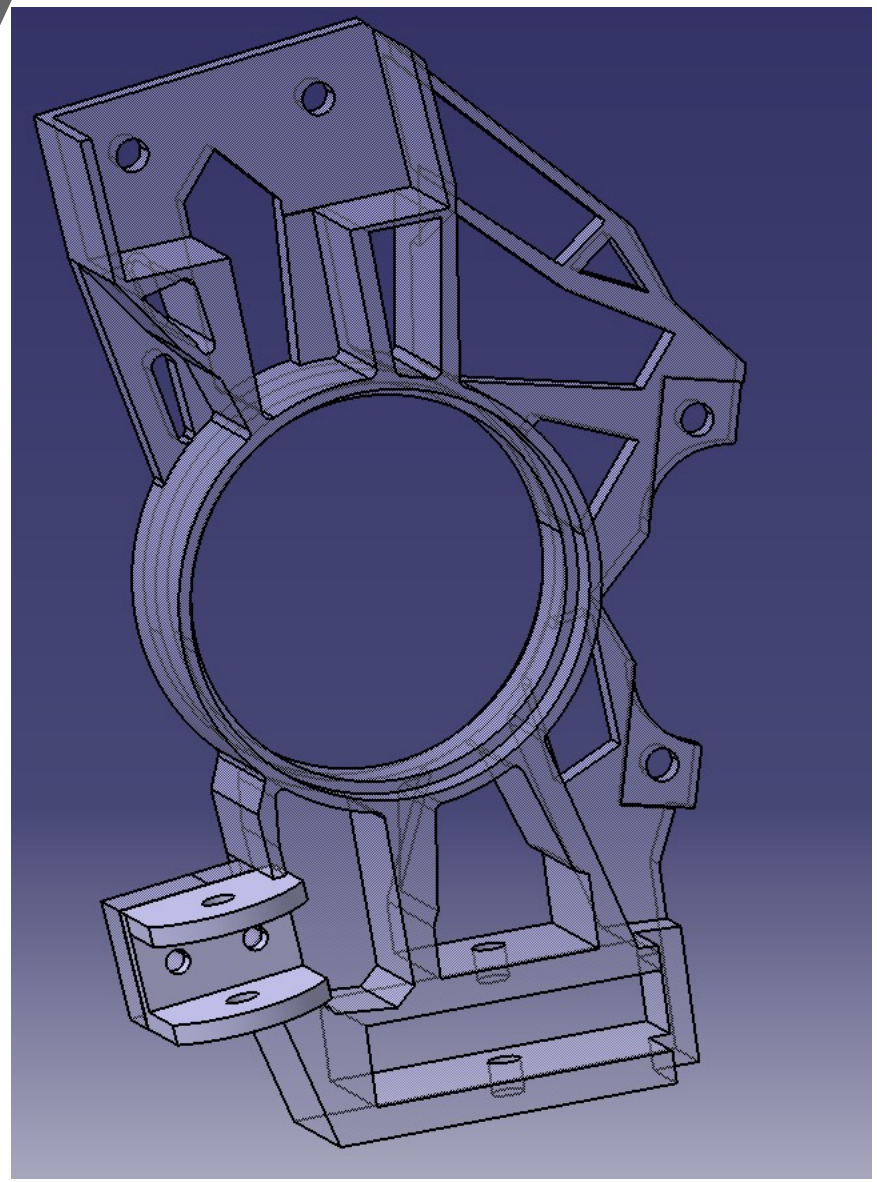

1 업라이트 너클 최적설계

X축 방향으로의 살빼기를 위하여
Extrusion 조건을 주고 다시 3차 살빼기를 진행.

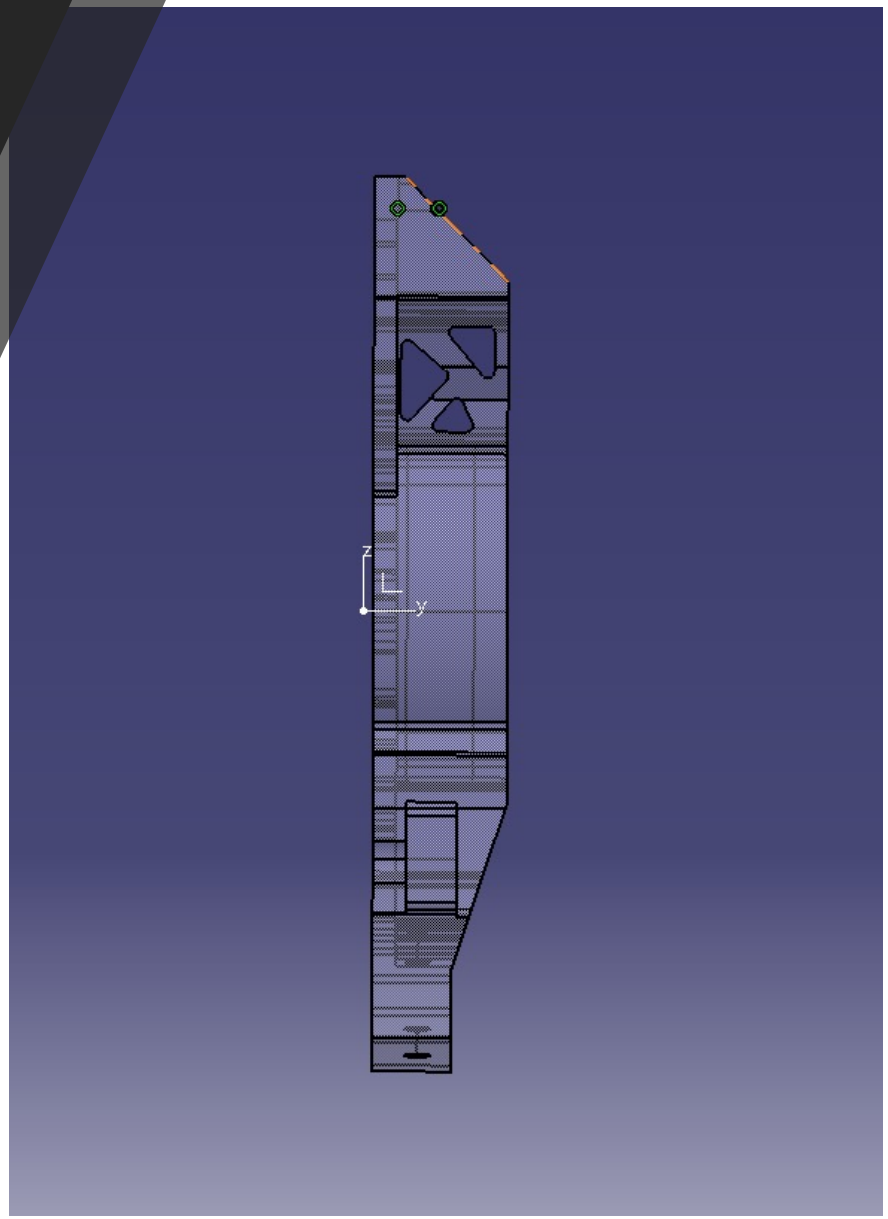

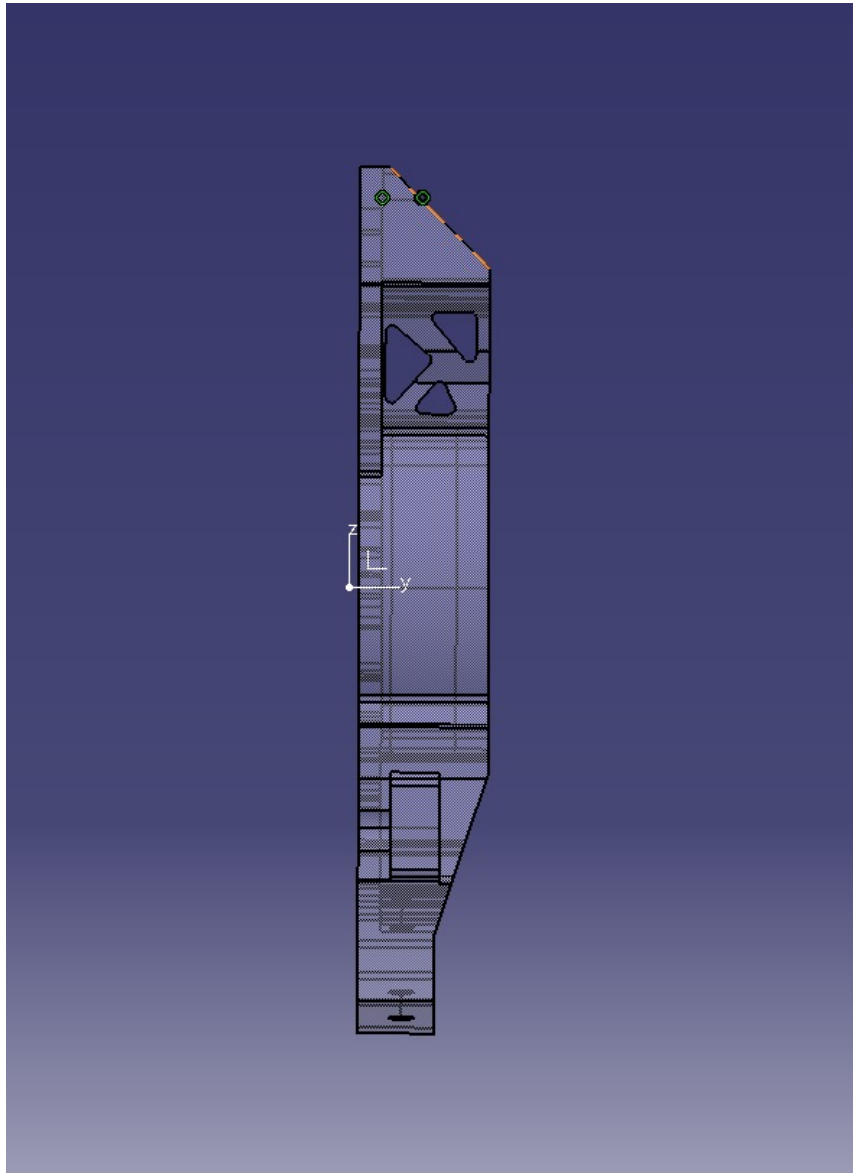
z
y

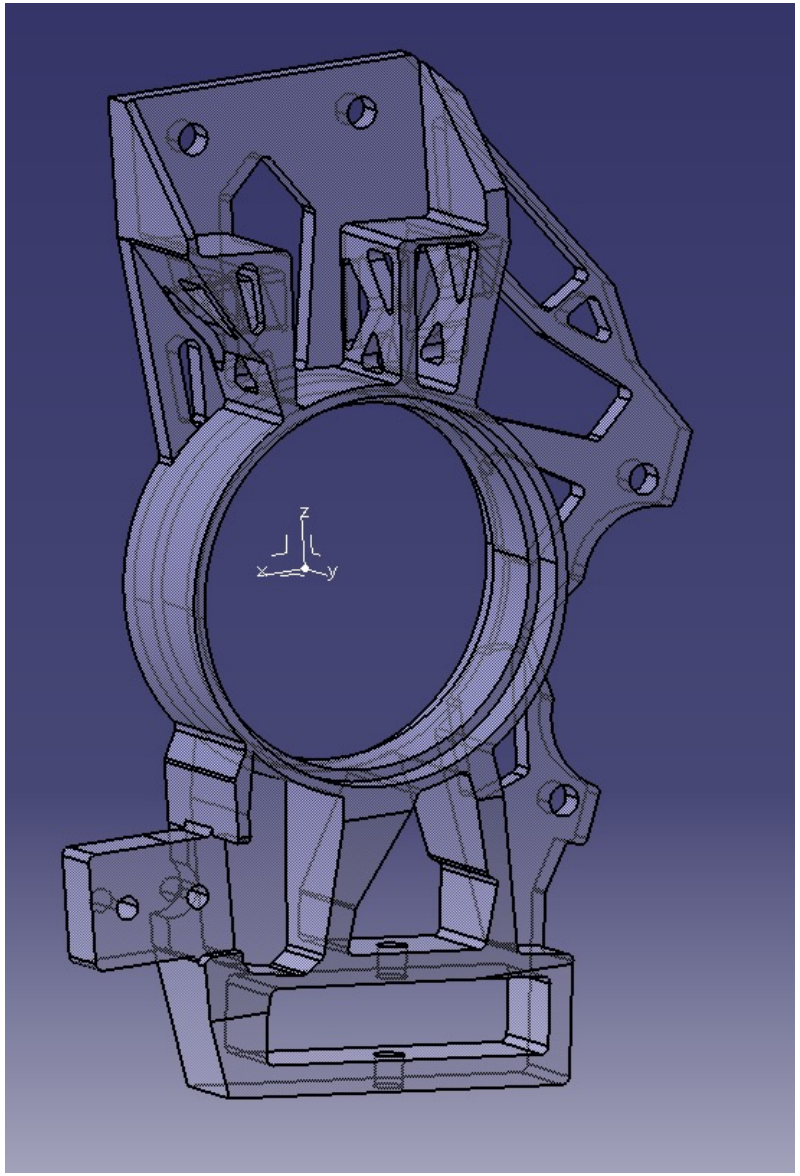
z
x
y

Model.stmod - Altair Inspire 2021.2.3 - OptiStruct

File Edit View Sketch Geometry PolyMesh PolyNURBS Structure Motion Manufacture Print3D Custom Custom

Files Measure Move Home | Variables | Fasteners Joints Connectors Spot Welds Contacts Connections | Loads Disps Accels Gravity Temps COG Materials Masses Systems Shape Controls Bead Patterns Setup | Analyze Optimize Run

Model

Object	Mass
Model	**
Steering bracket.1	0.044348 kg
Front Upper Arm Brac...	0.13305 kg
Front Knuckle Analysi...	**
Front Knuckle ...	
Front Upright ...	
Front Upright ...	
Part 1	0.12187 kg
Part 2	0.0017417 kg
Part 3	0.0017417 kg
Part 4	0.0035626 kg
Part 5	0.0035626 kg
Part 6	0.002032 kg
Part 7	0.002032 kg
Part 8	0.0023223 kg
Part 9	0.0023223 kg
Point 1	0 kg
Point 3	0 kg
Point 4	0 kg
Load Cases	

Property Editor

Name	Value

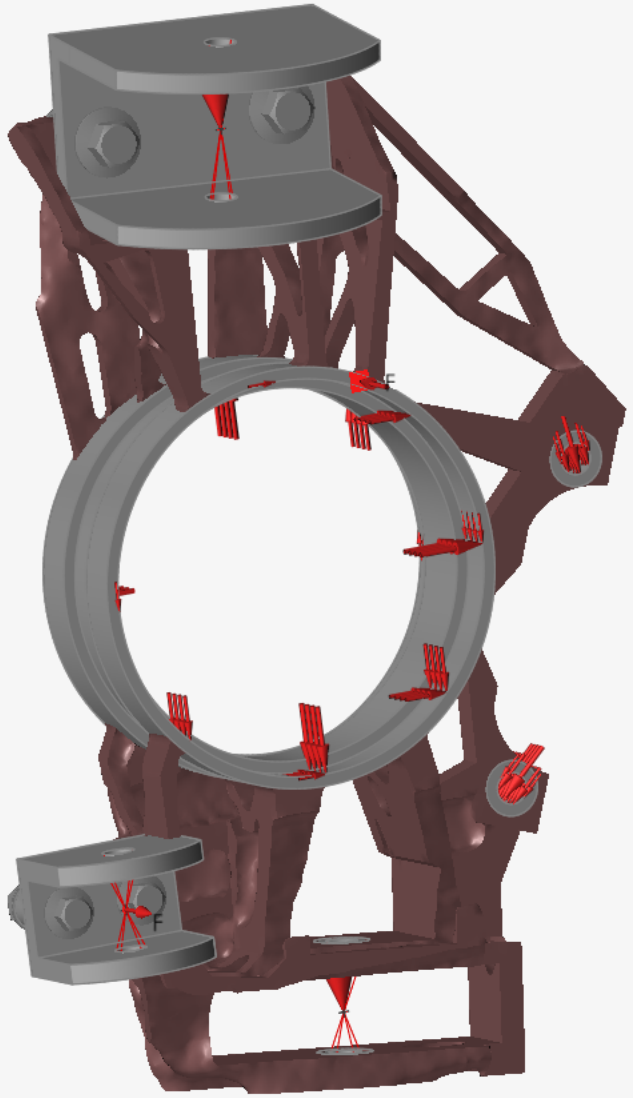

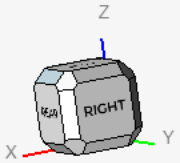

MKS (m kg N s)

24°C 대체로 흐림 오전 4:08 2022-07-25

Model.stmod - Altair Inspire 2021.2.3 - OptiStruct

File Edit View Sketch Geometry PolyMesh PolyNURBS Structure Motion Manufacture Print3D Custom Custom

Files Measure Move Home | Variables | Fasteners Joints Connectors Spot Welds Contacts Connections | Loads Disps Accels Gravity Temps COG Materials Masses Systems Shape Controls Bead Patterns Setup | Analyze Optimize Run

Model

Object	Mass
Model	**
Steering bracket.1	0.044348 kg
Front Upper Arm Brac...	0.13305 kg
Front Knuckle Analysi...	**
Front Knuckle ...	
Front Upright ...	
Front Upright ...	
Part 1	0.12187 kg
Part 2	0.0017417 kg
Part 3	0.0017417 kg
Part 4	0.0035626 kg
Part 5	0.0035626 kg
Part 6	0.002032 kg
Part 7	0.002032 kg
Part 8	0.0023223 kg
Part 9	0.0023223 kg
Point 1	0 kg
Point 3	0 kg
Point 4	0 kg
Load Cases	

Property Editor

Name	Value

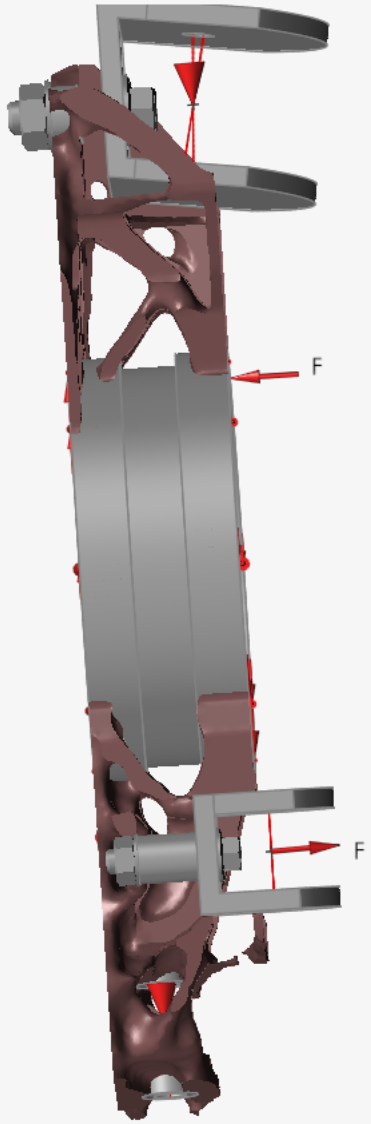

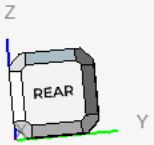

MKS (m kg N s)

24°C 대체로 흐림 오전 4:08 2022-07-25

Front Upright Assembly 5.stmod - Altair Inspire 2021.2.3 - OptiStruct

File Edit View Sketch Geometry PolyMesh PolyNURBS Structure Motion Manufacture Print3D Custom Custom

Files Measure Move Home | Variables | Fasteners Joints Connectors Spot Welds Contacts Connections | Loads Disps Accels Gravity Temps COG Materials Masses Systems Shape Controls Bead Patterns Setup | Analyze Optimize Run

Model

Object	Mass
Front Upright Assembly 5	**
Load Cases	
All Loads, Displacem...	
Support 1	
Support 2	
Support 3	
Support 4	
Force 1	
Force 2	
Force 3	
Force 4	
Force 5	
Force 6	
Force 7	
Force 8	
Force 9	
Force 10	
Force 11	
Force 12	
Force 13	

Property Editor

Name	Value

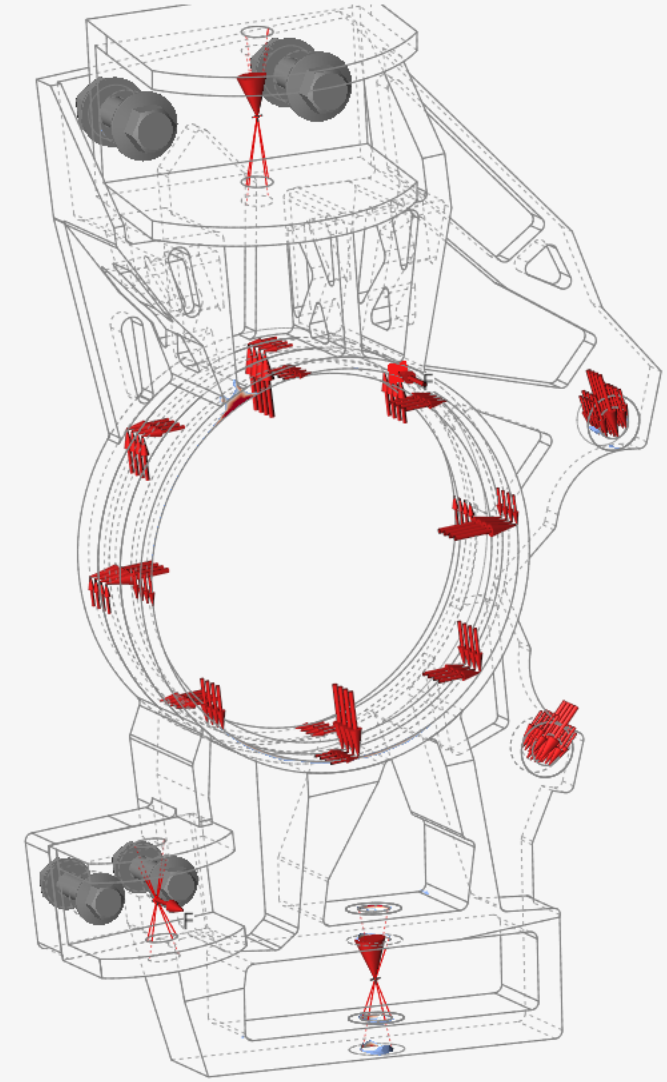

Analysis Explorer

Run: Front Upright Assembly 5 (1)

Load Case: Cor + Br front in wheel

Result Types: Percent of Yield

Percent of Yield:

Max: 254.60%

100.00%
90.00%
80.00%
70.00%
60.00%
50.00%
40.00%
30.00%
20.00%
10.00%
0.00%

Min: 0.00%

Show

Callouts

Compare Results

1 / 12

MKS (m kg N s)

24°C 맑음 오전 8:25 2022-07-25

1 업라이트 너클 최적설계

캘리퍼의 마운트 부분의 응력이 항복강도보다 높음, 구조상 그 부분의 두께를 늘릴 수 없는 상황.

->마운트 형상을 다른 방식으로 수정, 캘리퍼의 모델을 바꾸어서 설계.

Front Upright Assembly 11.stmod - Altair Inspire 2021.2.3 - OptiStruct

File Edit View Sketch Geometry PolyMesh PolyNURBS Structure Motion Manufacture Print3D Custom Custom

Files Measure Move Home | Variables | Fasteners Joints Connectors Spot Welds Contacts Connections | Loads Disps Accels Gravity Temps COG Materials Masses Systems Shape Controls Bead Patterns Setup | Analyze Optimize Run

Model

Object	Mas
Part 5	0.002
Part 6	0.002
Part 7	0.002
Point 1	0
Point 2	0
Point 3	0
Load Cases	
All Loads, Displacem...	
Cor + Br inner	
Cor + Br outer	
Acc	
Bump	
Bump arm to knuckle	
Brake arm to knuckle	
Roll left arm to knuckle	
Roll right arm to knuc...	
Connectors	
Connector 1	
Connector 2	
Connector 3	

Property Editor

Name	Value

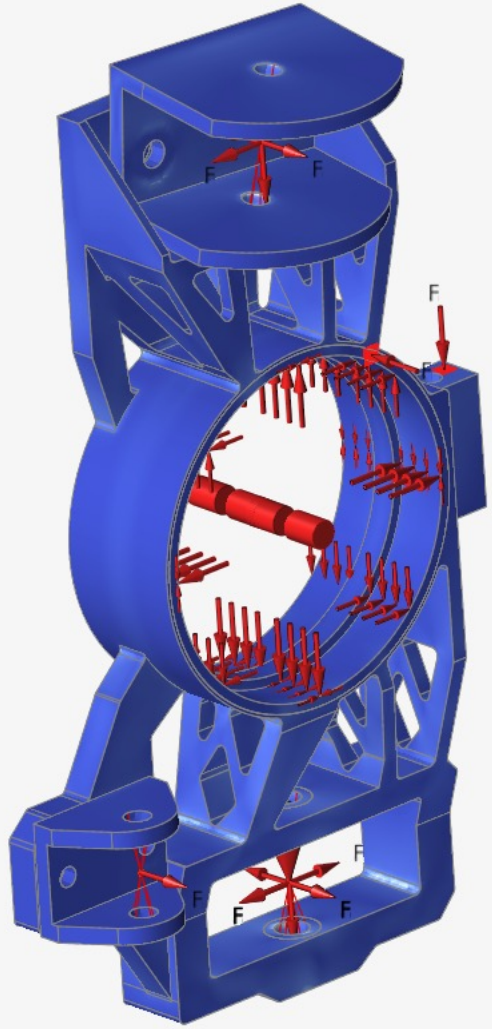

Analysis Explorer

Run: Front Upright Assembly 11 (12

Load Case: Result Envelope

Result Types: Percent of Yield

Percent of Yield:

Max: 100.38%

100.00%
90.00%
80.00%
70.00%
60.00%
50.00%
40.00%
30.00%
20.00%
10.00%
0.00%

Min: 0.02%

Show

Callouts

Min/Max

Compare Results

Z X Y REAR RIGHT

1 / 12

MKS (m kg N s)

28°C 흐림 오후 4:34 2022-08-17

Front Upright Assembly 11.stmod - Altair Inspire 2021.2.3 - OptiStruct

File Edit View Sketch Geometry PolyMesh PolyNURBS Structure Motion Manufacture Print3D Custom Custom

Home: Files, Measure, Move
Variables
Connections: Fasteners, Joints, Connectors, Spot Welds, Contacts
Setup: Loads, Disps, Accels, Gravity, Temps, COG, Materials, Masses, Systems, Shape Controls, Bead Patterns
Run: Analyze, Optimize

Model

Object	Mas
Part 5	0.002
Part 6	0.002
Part 7	0.002
Point 1	0
Point 2	0
Point 3	0
Load Cases	
All Loads, Displacem...	
Cor + Br inner	
Cor + Br outer	
Acc	
Bump	
Bump arm to knuckle	
Brake arm to knuckle	
Roll left arm to knuckle	
Roll right arm to knuc...	
Connectors	
Connector 1	
Connector 2	
Connector 3	

Property Editor

Name	Value

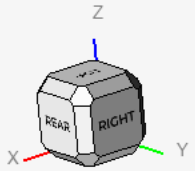

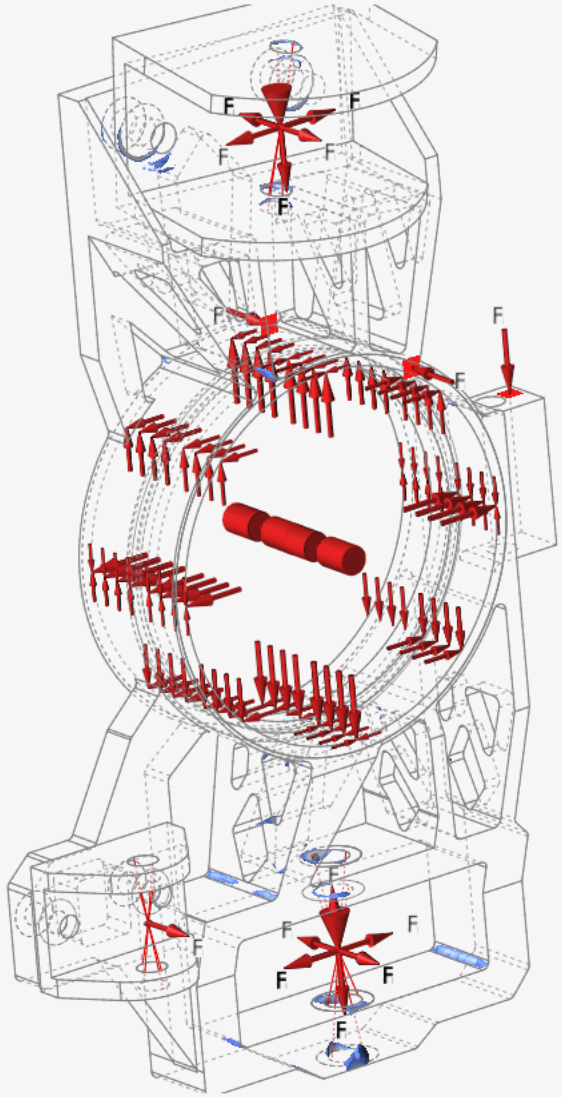

1 / 12

Analysis Explorer

Run: Front Upright Assembly 11 (12
Load Case: Result Envelope
Result Types: Percent of Yield

Percent of Yield:
Max: 100.38%
100.00%
90.00%
80.00%
70.00%
60.00%
50.00%
40.00%
30.00%
20.00%
10.00%
0.00%
Min: 0.02%

Show

Callouts: Min/Max

Compare Results

MKS (m kg N s)

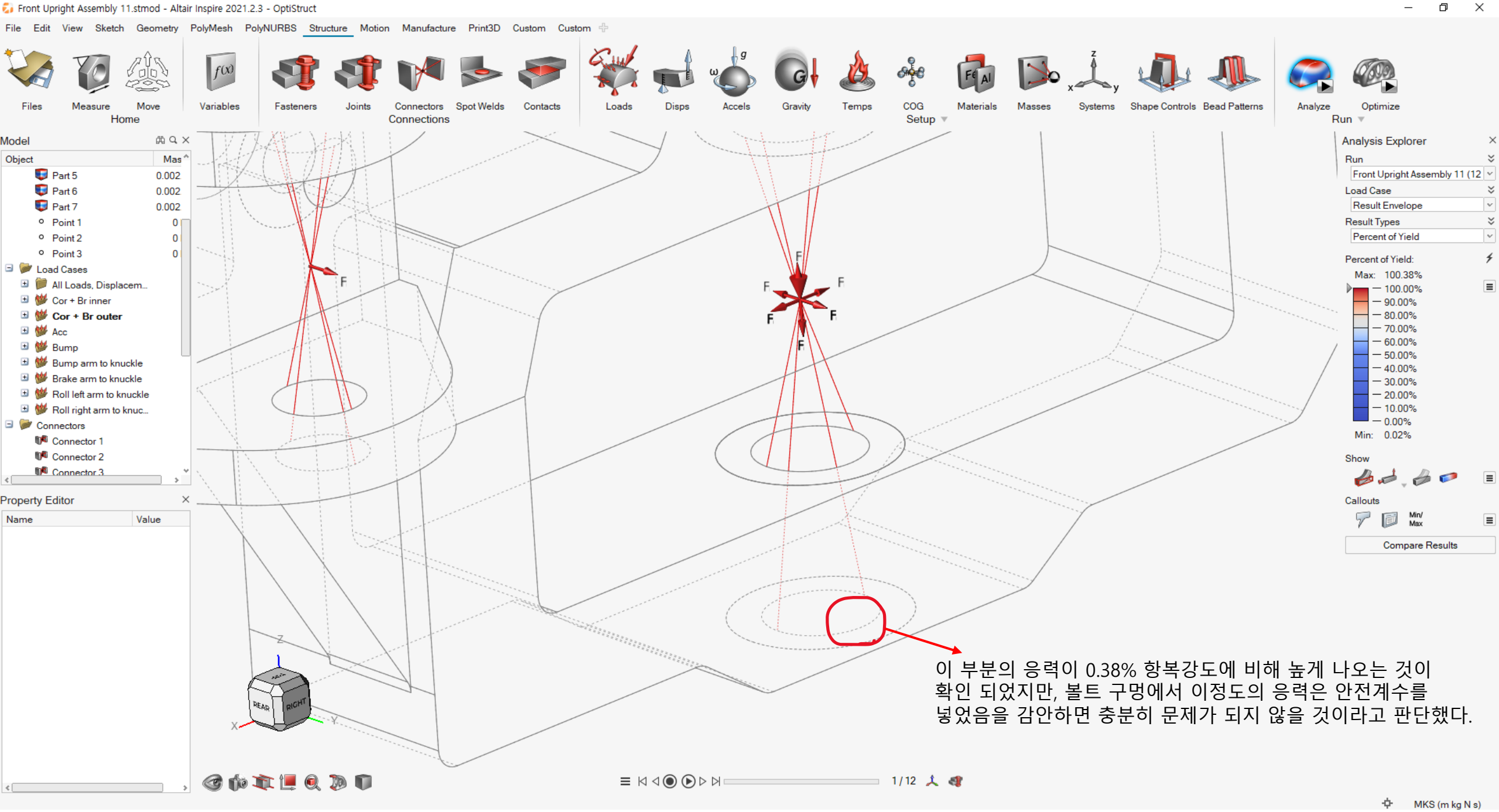

이 부분의 응력이 0.38% 항복강도에 비해 높게 나오는 것이 확인 되었지만, 볼트 구멍에서 이정도의 응력은 안전계수를 넣었음을 감안하면 충분히 문제가 되지 않을 것이라고 판단했다.

해석결과 및 한계

FRONT	1. inner wheel		REAR	1. inner wheel	-> not nes
	in bearing	out bearing		in bearing	out bearing
Vertical	-16286.833	17185.4	Vertical	-347.81	529.383157
Horizontal	617.749587	-1965.57	Horizontal	124.834	-397.19974
	knuckle lateral force +				
1. outer wheel			1. outer wheel		
	in bearing	out bearing		in bearing	out bearing
Vertical	24634.5556	-22964.5	Vertical	9723.1659	-13426.7
Horizontal	1148.16658	-3653.26	Horizontal	655.25	-2084.89
	knuckle lateral force +				
2. inner wheel		-> not nessesary	2. inner wheel		
	in bearing	out bearing		in bearing	out bearing
Vertical	-2183.47	2329.22	Vertical	-10588.3	3907.75734
Horizontal	0	0	Horizontal	-642.379	2043.93272
	knuckle lateral force +				
2. outer wheel		-> not nessesary	2. outer wheel		
	in bearing	out bearing		in bearing	out bearing
Vertical	15454.5854	-14537.3	Vertical	17796.4	-24605.6
Horizontal	0	0	Horizontal	-1172.8	3731.62315
	knuckle lateral force +				
3. in & out wheel			3. in & out wheel		
	in bearing	out bearing		in bearing	out bearing
Vertical	278.932885	-887.514	Vertical	-1127.6	3587.81841
Horizontal	-829.5336	-829.534	Horizontal	(1691.40)	5381.73
4. just braking		-> not nessesary	4. just braking		-> not nessesary
	in bearing	out bearing		in bearing	out bearing
Vertical	-190.11789	604.921	Vertical	-658.549	2095.38
Horizontal	285.176833	-907.381	Horizontal	987.82	-3143.08

<작년 차량의 너클 하중>

FRONT	1. inner wheel		REAR	1. inner wheel	-> not nessesa
	in bearing	out bearing		in bearing	out bearing
Vertical	-27433.048	28706.98	Vertical	-215.67	230.659422
Horizontal	509.572249	-2420.47	Horizontal	5.997712	-28.4891335
	knuckle lateral force +				
1. outer wheel			1. outer wheel		
	in bearing	out bearing		in bearing	out bearing
Vertical	42522.6553	-40057.6	Vertical	19396.793	-23448.9
Horizontal	986.01703	-4683.58	Horizontal	482.44	-2291.60
	knuckle lateral force +				
2. inner wheel		-> not nessesary	2. inner wheel		
	in bearing	out bearing		in bearing	out bearing
Vertical	-3754.6636	3864.652	Vertical	-19364.4	3907.75734
Horizontal	0	0	Horizontal	-471.575	2239.97915
	knuckle lateral force +				
2. outer wheel		-> not nessesary	2. outer wheel		
	in bearing	out bearing		in bearing	out bearing
Vertical	27085.0399	-25783.9	Vertical	31986.93	-38315.3
Horizontal	0	0	Horizontal	-948.019	4503.09186
	knuckle lateral force +				
3. in & out wheel			3. in & out wheel		
	in bearing	out bearing		in bearing	out bearing
Vertical	-231.30661	1098.706	Vertical	-645.549	3066.35955
Horizontal	-1085.0796	-1085.08	Horizontal	(968.32)	4599.54
4. just braking		-> not nessesary	4. just braking		-> not nessesary
	in bearing	out bearing		in bearing	out bearing
Vertical	-647.80198	3077.059	Vertical	-229.054	1088.01

<올해 차량의 너클 하중>

에어로 파츠 장착 및 모터 성능 향상, Maximum speed Target값 등의 향상으로 너클의 설계 하중이 작년 차량보다 각 상황별로 적게는 2~30% 많게는 7~80% 증가하였다.

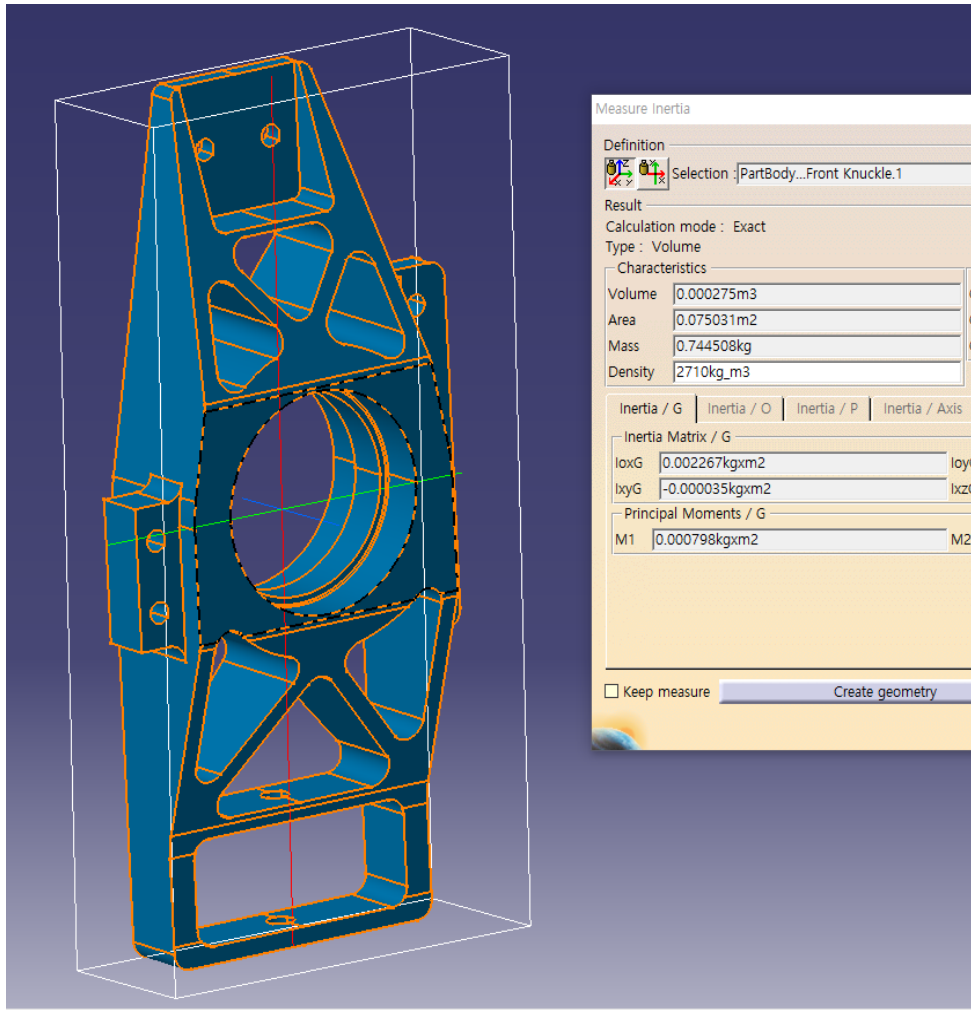

<작년 차량 너클 형상>

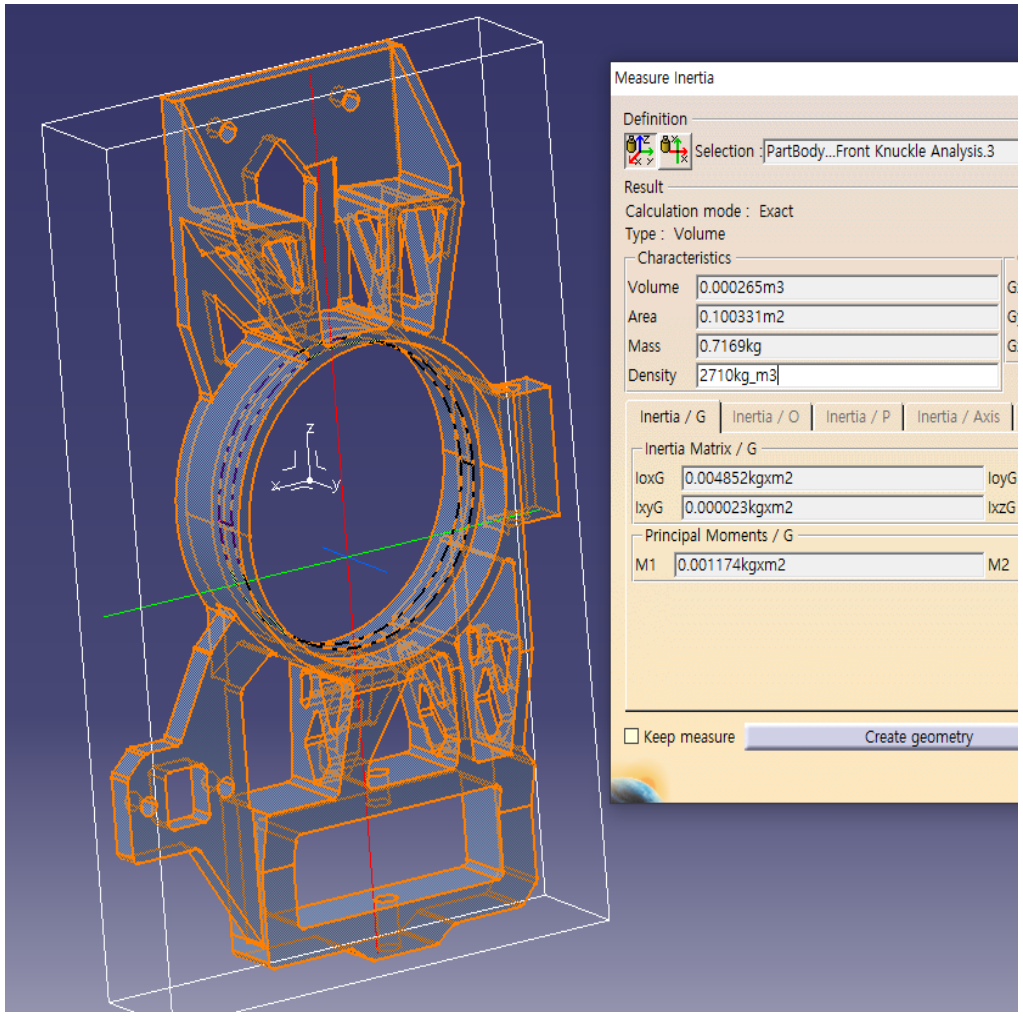

<올해 차량 너클 형상>

질량이 0.7445kg 에서 0.7169kg 으로 약 3.7% 감량하였다.

<너클 최종 형상 및 어셈블리>

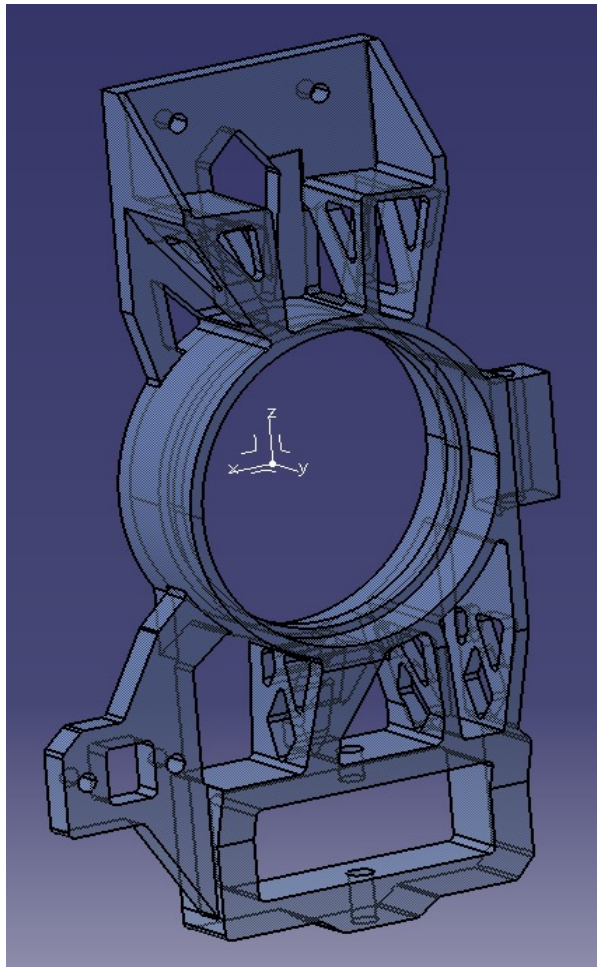

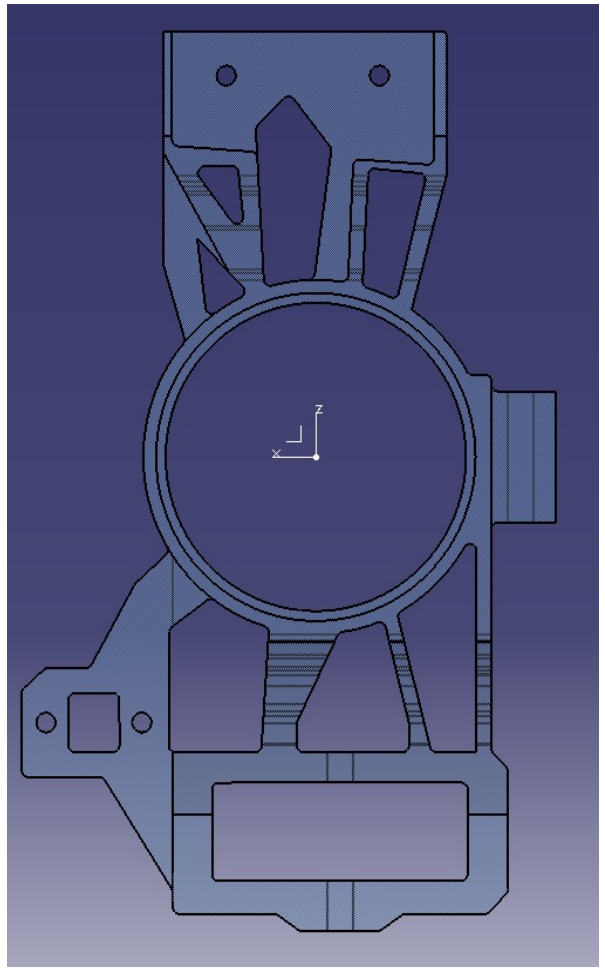

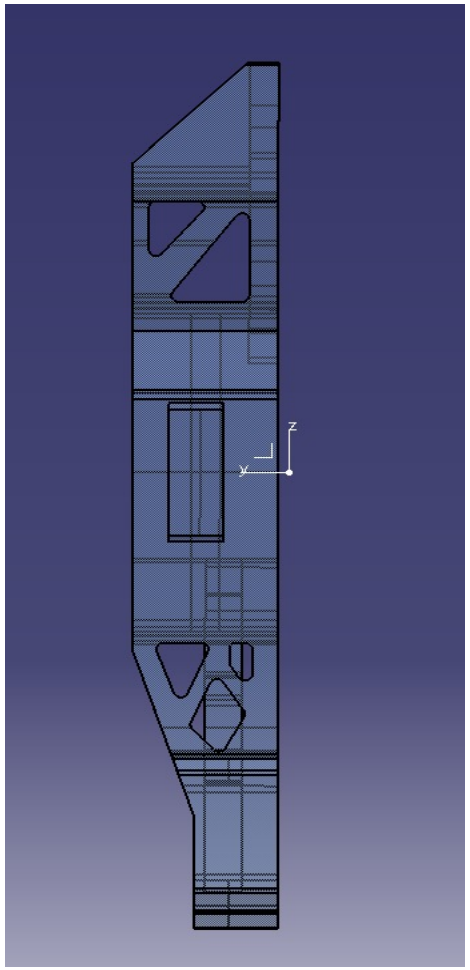

<너클 최종 형상 및 어셈블리>

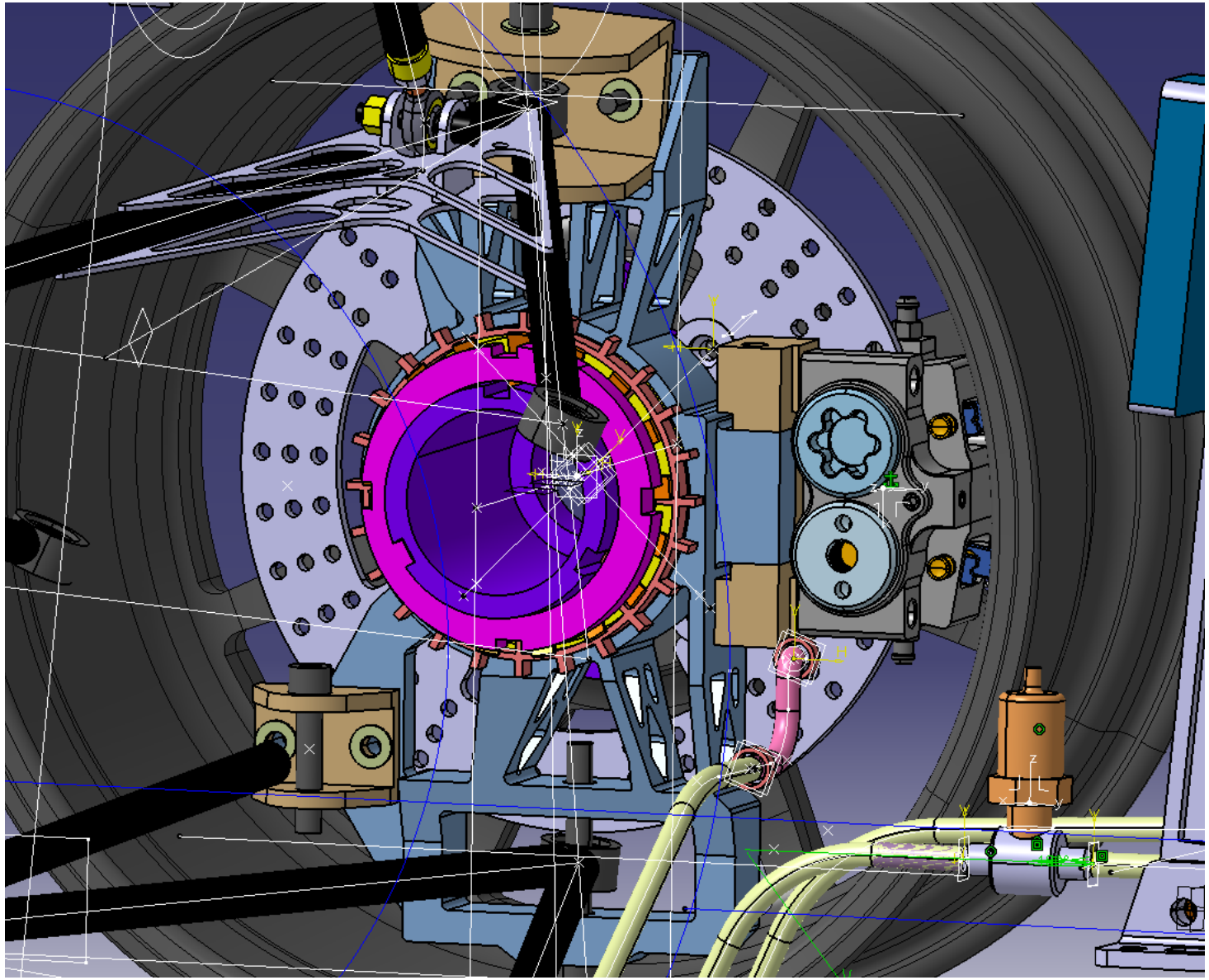

1 업라이트 너클 최적설계

<한계 및 앞으로의 과제>

1. CNC 가공의 형상을 고려하다 보니, 생각보다 아쉬운 질량 감량 효과.

2. 볼트 구멍 부분의 응력집중현상.
-> Hyperworks 에서 메쉬 형상 수정을 통한 더블체크

2 서스펜션 벨 크랭크 최적설계

서스펜션 부품 최적화 진행
- 타이어의 거동에 중요한 현가 하 질량의 경량화
- 늘어난 차량 스펙에 따른 부품 경량화 필수

벨 크랭크 최적화 진행
- 현가 하 질량으로만 이루어져 있음
- 형상의 다양성이 무궁무진

제작 계획
- 티타늄 합금 금속 3D 프린팅 (레이저 소결식)

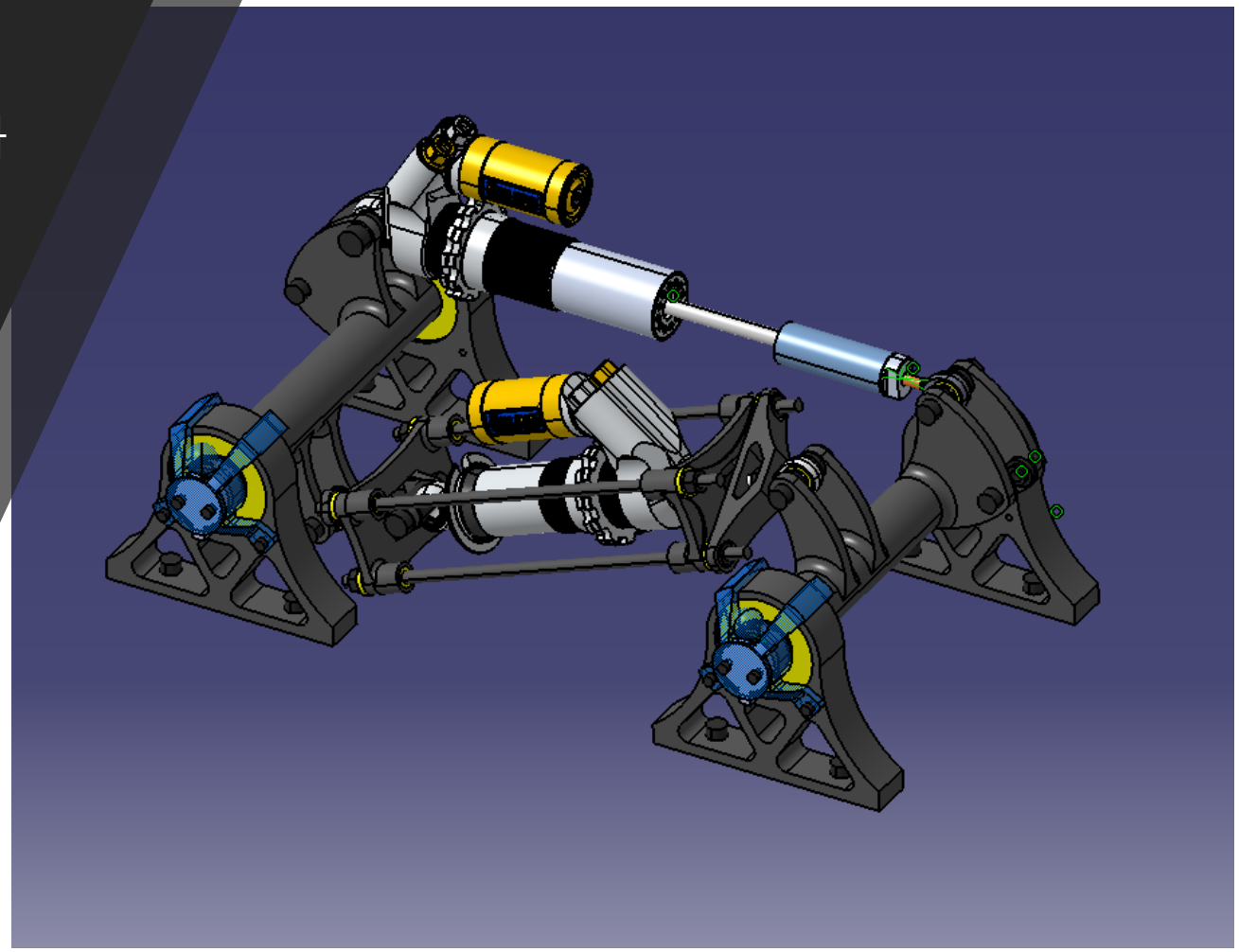

2 서스펜션 벨 크랭크 최적설계

첫 번째 디자인 스페이스 설정
- 댐퍼, 가변저항 마운트를 위한 공간
- 벨 크랭크의 피벗 축을 위한 공간

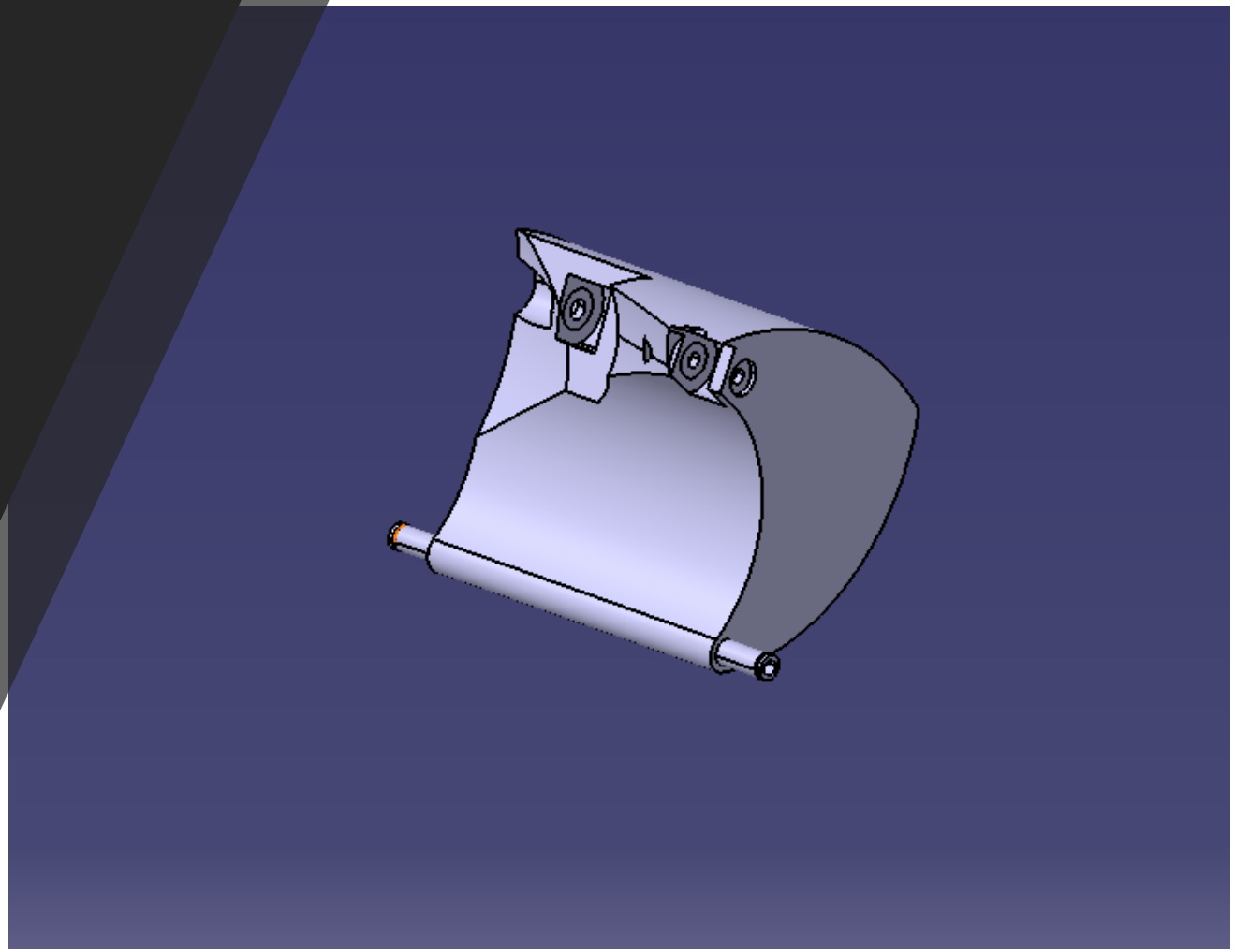

Front rocker 3.stmod - Altair Inspire 2021.2.3 - OptiStruct

File Edit View Sketch Geometry PolyMesh PolyNURBS Structure Motion Manufacture Print3D Custom Custom

Files Measure Move Home | Variables | Fasteners Joints Connectors Spot Welds Contacts Connections | Loads Disps Accels Gravity Temps COG Materials Masses Systems Shape Controls Bead Patterns Setup | Analyze Optimize

Model

Object	Mass
Front rocker 3	**0.43408 kg**
Front_rocker_nondes...	0.0022217 kg
Front_rocker_nondes...	0.0022217 kg
Front_rocker_nondes...	0.0026661 kg
Front_rocker_nondes...	0.0026661 kg
Front_rocker_nondes...	0.0022217 kg
Front_rocker_nondes...	0.0022217 kg
Front_rocker_nondes...	0.0073045 kg
Front_rocker_nondes...	0.0073045 kg
Point 1	0 kg
Point 2	0 kg
Point 3	0 kg
Front rocker	0.40525 kg
Front rocker	
Front rocker 3 ...	
Load Cases	
All Loads, Displacem...	
Support 1	
Support 2	
Support 3	

Property Editor

Name	Value

Run Status

Name	Status	Completed
Front rocker 3 Max Stiffn...		07/26/2022 12:19:50

History... View Now Delete Close

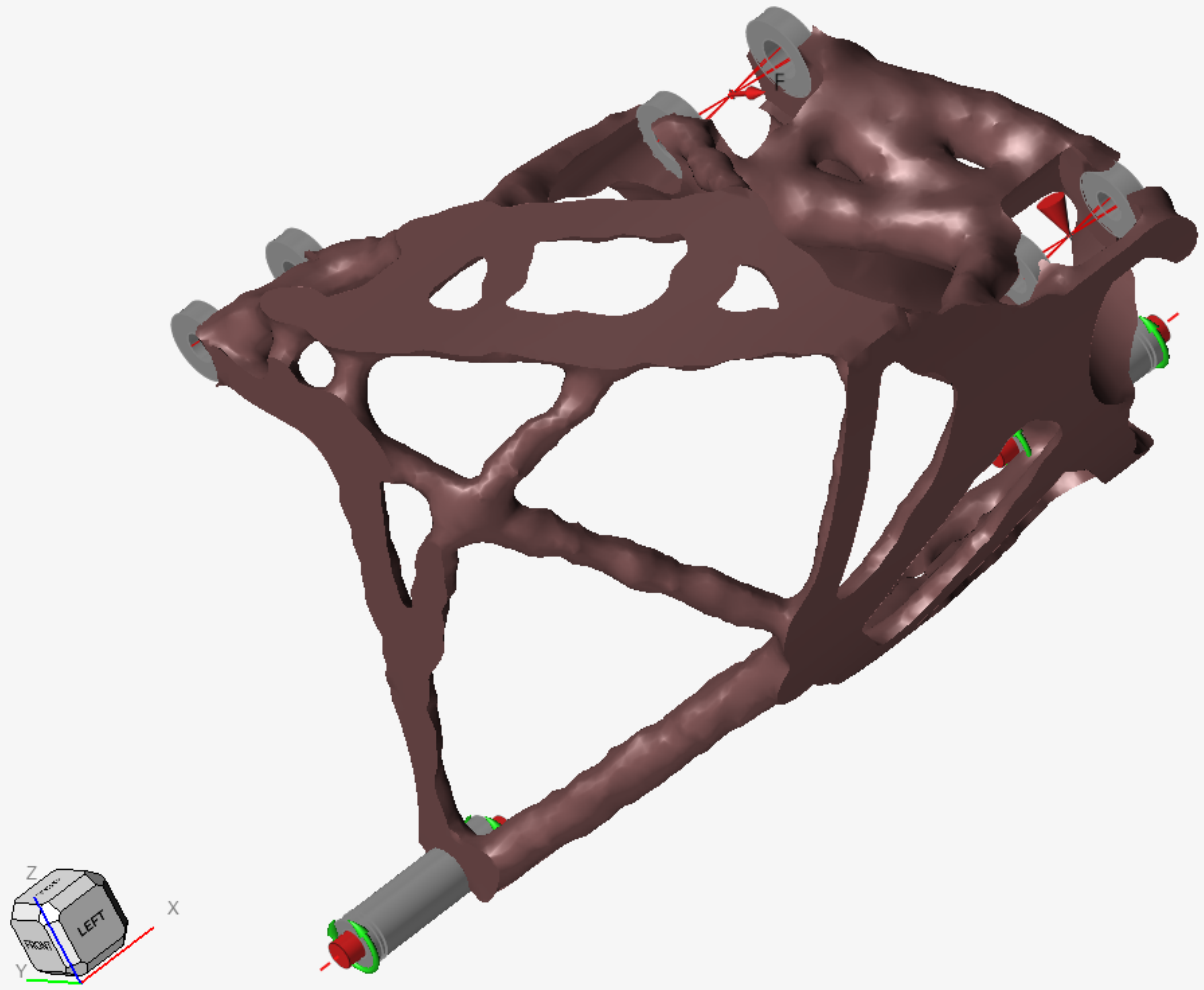

첫 번째 형상

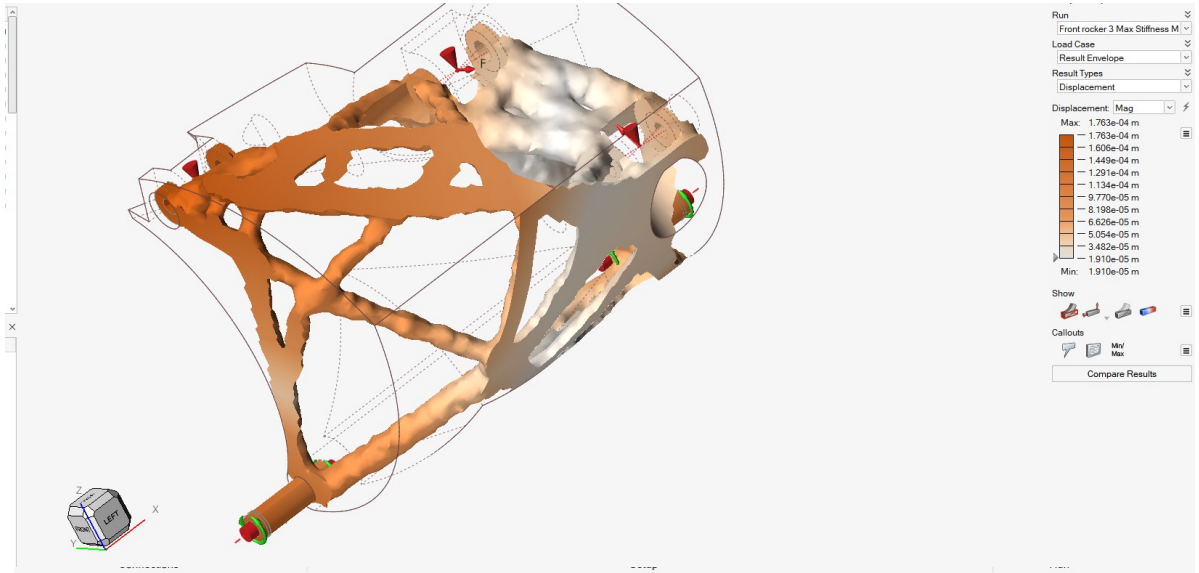
Run
Front rocker 3 Max Stiffness M
Load Case
Result Envelope
Result Types
Displacement
Displacement: Mag
Max: 1.763e-04 m
1.763e-04 m
1.606e-04 m
1.449e-04 m
1.291e-04 m
1.134e-04 m
9.770e-05 m
8.198e-05 m
6.626e-05 m
5.054e-05 m
3.482e-05 m
1.910e-05 m
Min: 1.910e-05 m
Show
Callouts
Min/
Max
Compare Results

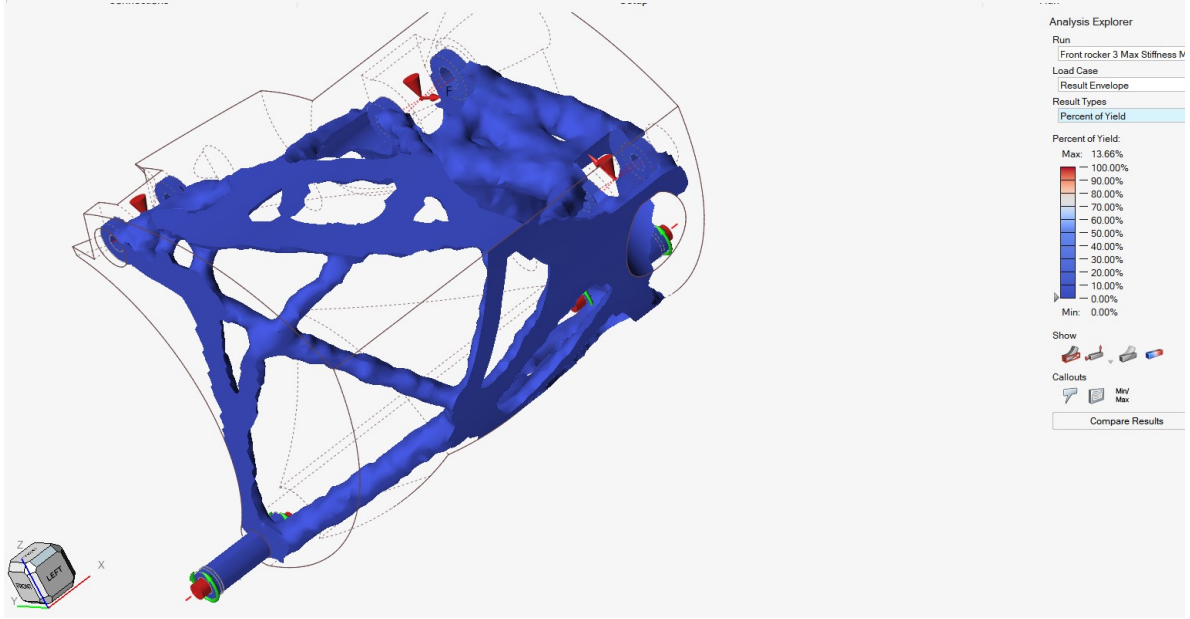
Analysis Explorer
Run
Front rocker 3 Max Stiffness M
Load Case
Result Envelope
Result Types
Percent of Yield
Percent of Yield:
Max: 13.66%
100.00%
90.00%
80.00%
70.00%
60.00%
50.00%
40.00%
30.00%
20.00%
10.00%
0.00%
Min: 0.00%
Show
Callouts
Min/
Max
Compare Results

첫 번째 형상
해석 결과

2 서스펜션 벨 크랭크 최적설계

두 번째 디자인 스페이스 설정
- 부재의 두께만 변한다고 상정
- Minimum thickness 재설정
- 부재가 부족한 부분과 과한 부분 판단

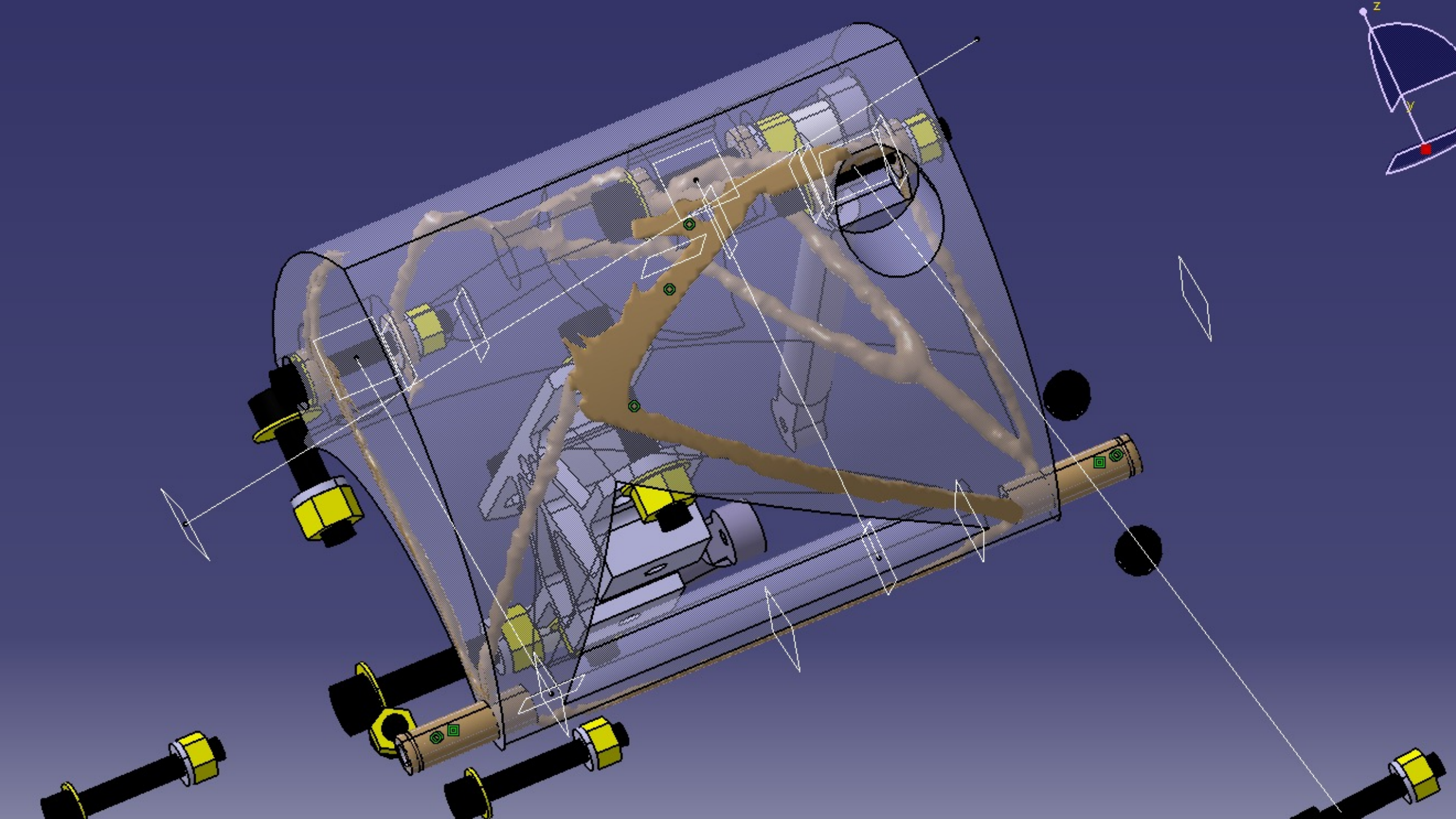
z
y

metry of _B6000ZZ (Symmetry of _B6000ZZ.2.1)

M6-AuroraBearing Damperside extension rocker (AM-M6-AuroraBearing Damperside extension rocker)

M6-AuroraBearing Spring mount adapter rocker (AM-M6-AuroraBearing Spring mount adapter rocker)

5 267 spring mount adapter (TTX25 267 spring mount adapter.2)

t coilover mount (Front coilover mount.1)

t potentiometer (Front potentiometer.1)

t bolts and nuts (Front bolts and nuts.1)

t rocker (Front rocker.1)

ront rocker

xy plane

yz plane

zx plane

Axis Systems

Geometrical Set.1

point

line

plane

sketch

Sketch.3

Sketch.5

Sketch.6

Sketch.7

Sketch.8

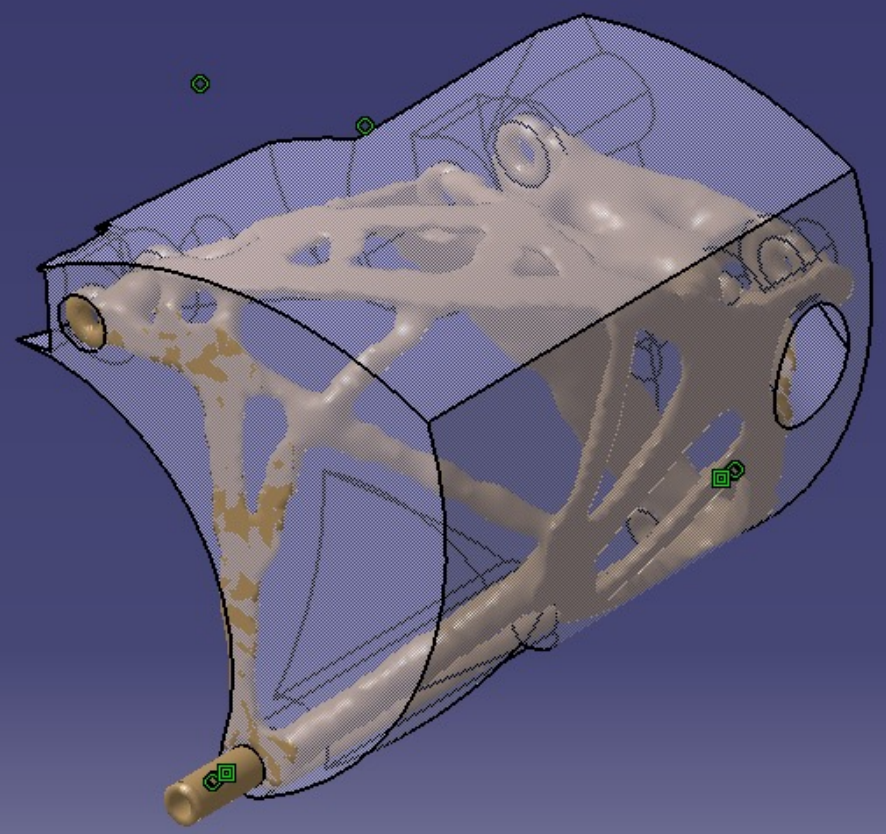

Front rocker 3.stmod - Altair Inspire 2021.2.3 - OptiStruct

File Edit View Sketch Geometry PolyMesh PolyNURBS Structure Motion Manufacture Print3D Custom Custom

Files Measure Move Home | Variables | Fasteners Joints Connectors Spot Welds Contacts Connections | Loads Disps Accels Gravity Temps COG Materials Masses Systems Shape Controls Bead Patterns Setup | Analyze Optimize

Model

Object	Mass
Front rocker 3	**0.43408 kg**
Front_rocker_nondes...	0.0022217 kg
Front_rocker_nondes...	0.0022217 kg
Front_rocker_nondes...	0.0026661 kg
Front_rocker_nondes...	0.0026661 kg
Front_rocker_nondes...	0.0022217 kg
Front_rocker_nondes...	0.0022217 kg
Front_rocker_nondes...	0.0073045 kg
Front_rocker_nondes...	0.0073045 kg
Point 1	0 kg
Point 2	0 kg
Point 3	0 kg
Front rocker	0.40525 kg
Front rocker	
Front rocker 3 ...	
Load Cases	
All Loads, Displacem...	
Support 1	
Support 2	
Support 3	

Property Editor

Name	Value

Run Status

Name	Status	Completed
Front rocker 3 Max Stiffn...		07/26/2022 12:19:50

History... View Now Delete Close

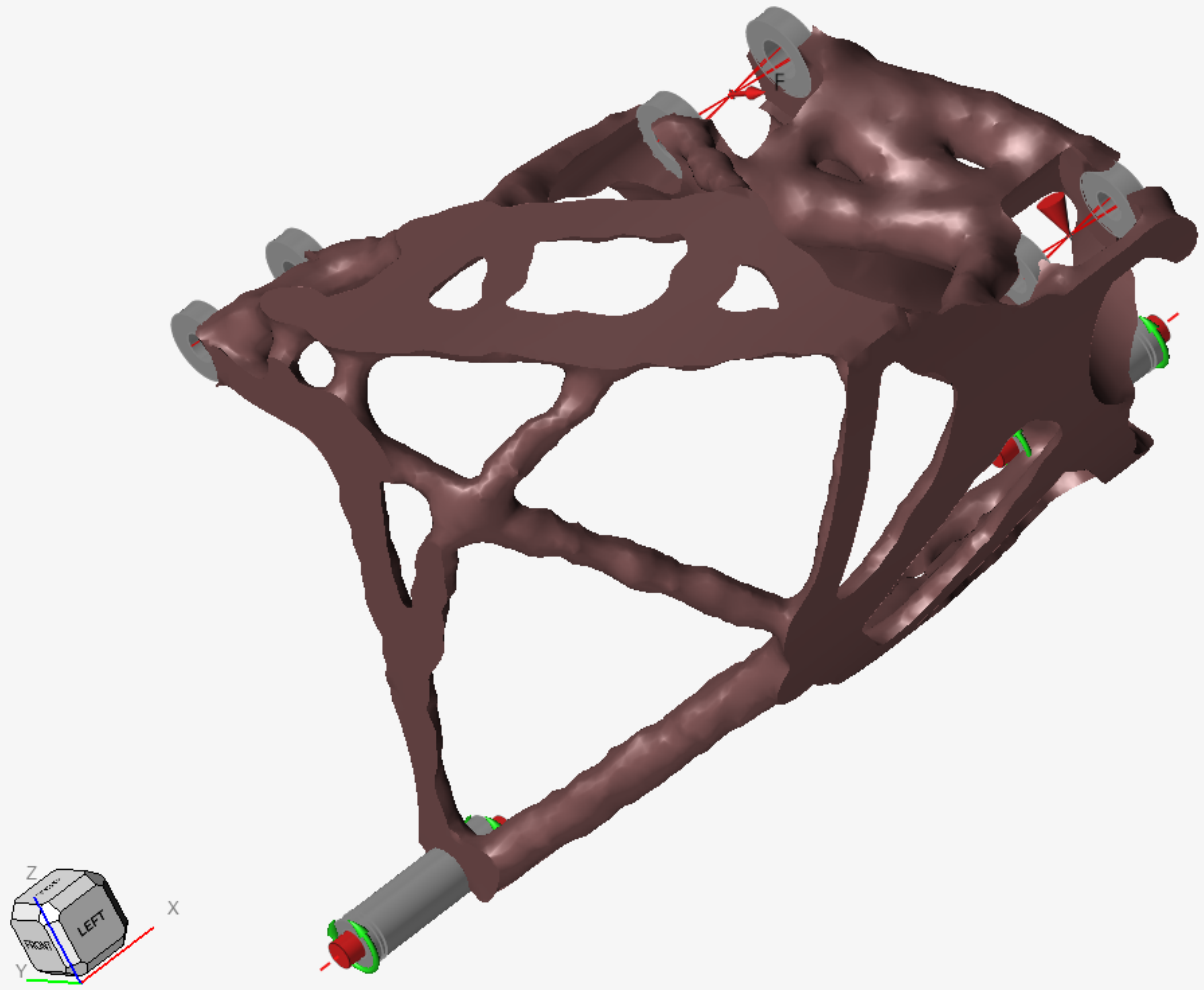

두 번째 형상

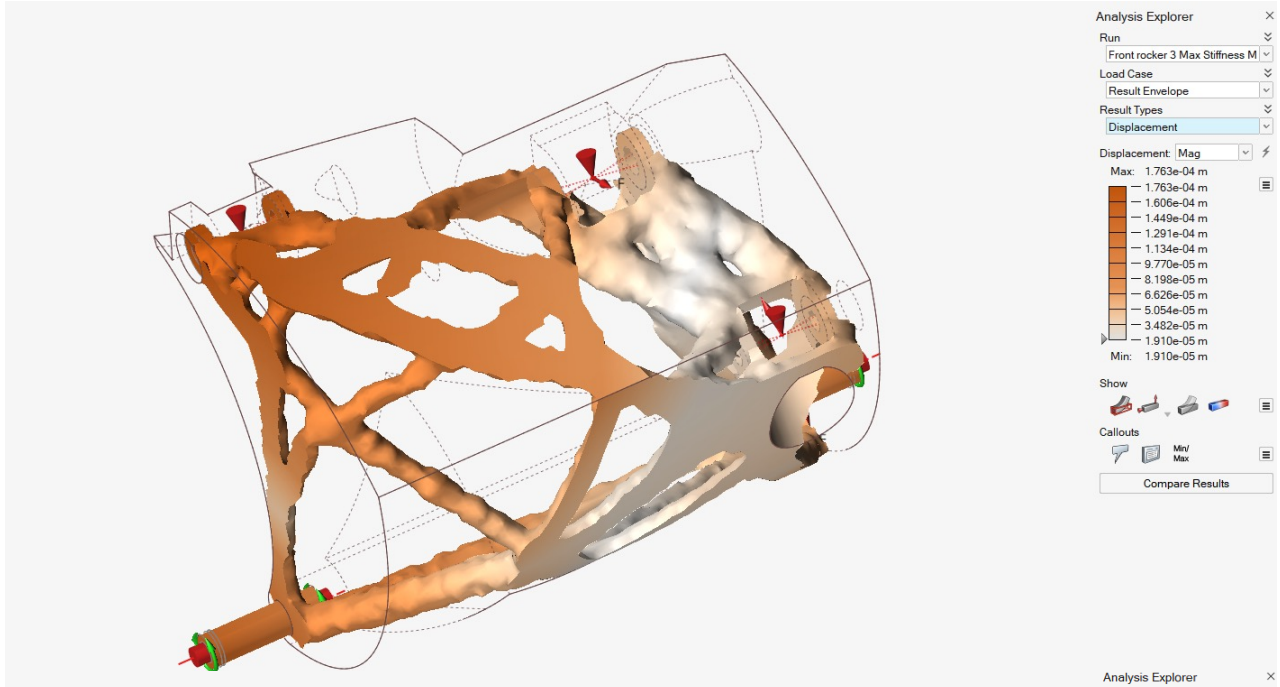
Analysis Explorer
Run
Front rocker 3 Max Stiffness M
Load Case
Result Envelope
Result Types
Displacement
Displacement: Mag
Max: 1.763e-04 m
1.763e-04 m
1.606e-04 m
1.449e-04 m
1.291e-04 m
1.134e-04 m
9.770e-05 m
8.198e-05 m
6.626e-05 m
5.054e-05 m
3.482e-05 m
1.910e-05 m
Min: 1.910e-05 m
Show
Callouts
Min/ Max
Compare Results

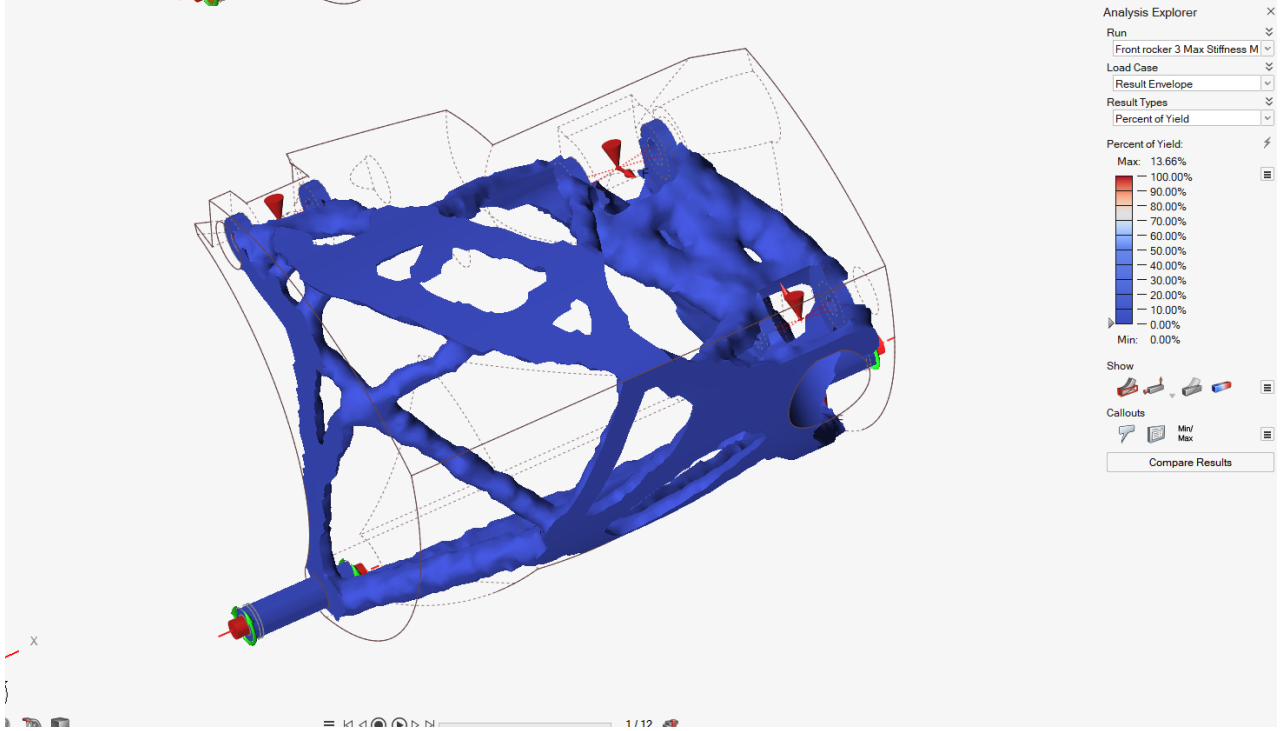
Analysis Explorer
Run
Front rocker 3 Max Stiffness M
Load Case
Result Envelope
Result Types
Percent of Yield
Percent of Yield:
Max: 13.66%
100.00%
90.00%
80.00%
70.00%
60.00%
50.00%
40.00%
30.00%
20.00%
10.00%
0.00%
Min: 0.00%
Show
Callouts
Min/ Max
Compare Results

두 번째 형상
해석 결과

2 서스펜션 벨 크랭크 최적설계

세 번째 디자인 스페이스 설정
- Minimum thickness 재설정
- 피벗 축의 바깥 쪽 부재 추가

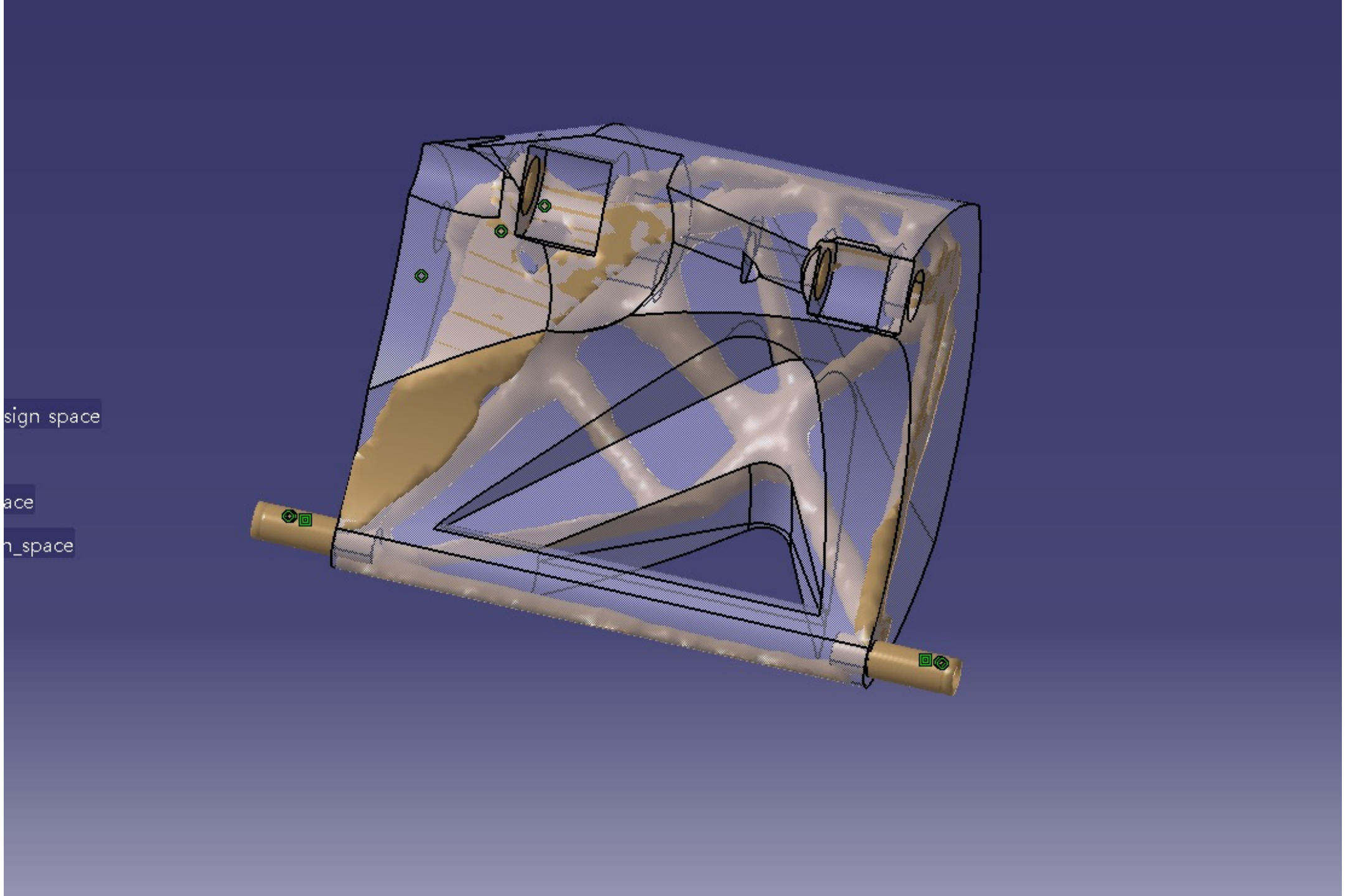
sign space
ace
n_space

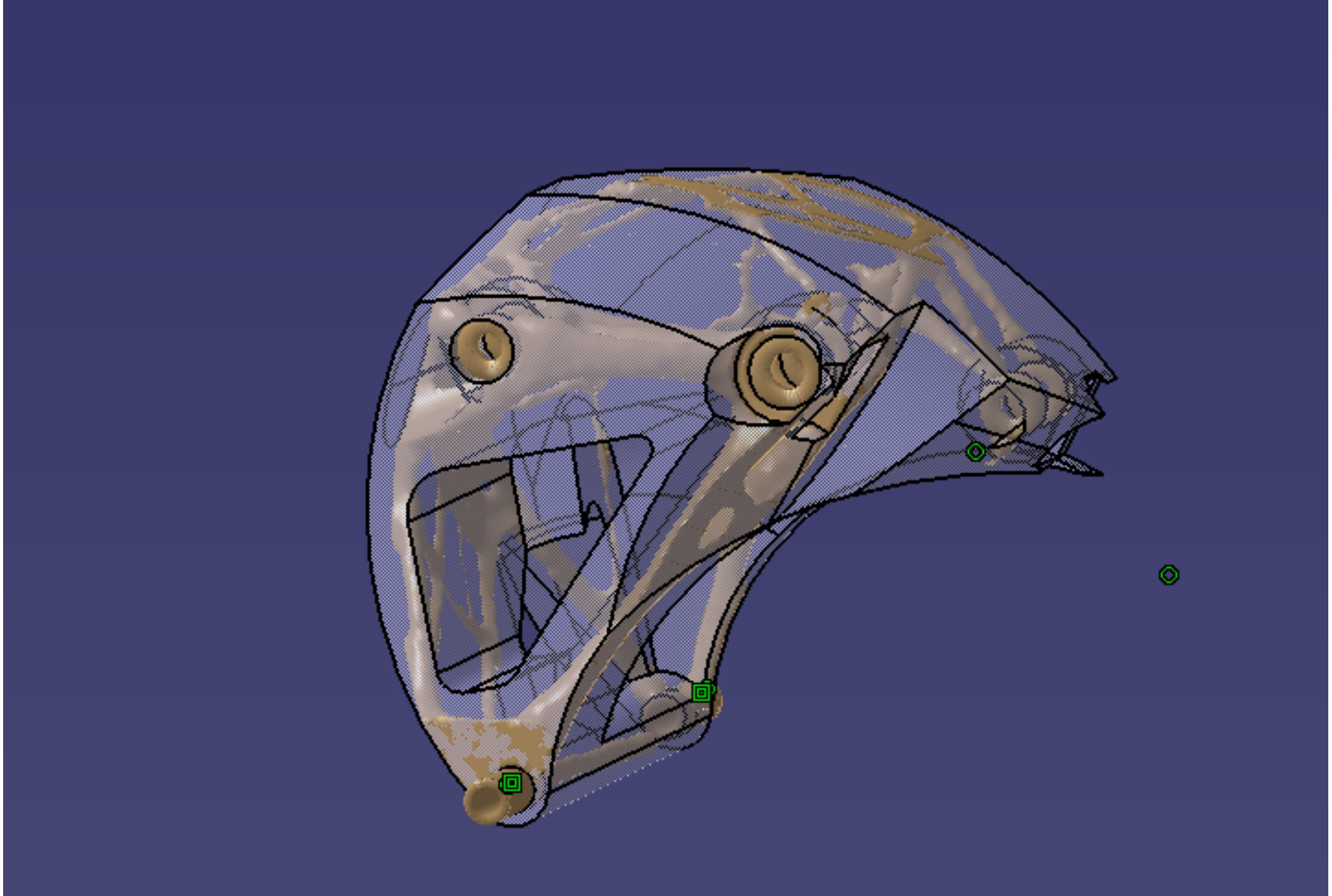

2 서스펜션 벨 크랭크 최적설계

제작을 위한 설계 후 처리
- 세 번째 최적화 형상을 바탕으로 한 polyNURBS 기능 사용
- 응력 집중을 최대한 피하고, 기존의 Nondesign space를 침범하지 않게끔 디자인

Front rocker 9.stmod - Altair Inspire 2021.2.3 - OptiStruct

File Edit View Sketch Geometry PolyMesh PolyNURBS Structure Motion Manufacture Print3D Custom Custom

Home: Files, Measure, Move, Variables

Create: Primitive, Fit, Wrap, Pave

Modify: Move Bodies, Mirror Bodies, +/-, Split, Bridge, Sharpen, Repair, Adjust, Shape

Click two edges to split the cage.

Model

Object	Mass
Front rocker 9	**
Front_rocker_nondes...	0.0022217 kg
Front_rocker_nondes...	0.0022217 kg
Front_rocker_nondes...	0.0026661 kg
Front_rocker_nondes...	0.0026661 kg
Front_rocker_nondes...	0.0022217 kg
Front_rocker_nondes...	0.0022217 kg
Front_rocker_nondes...	0.0073045 kg
Front_rocker_nondes...	0.0073045 kg
Point 1	0 kg
Point 2	0 kg
Point 3	0 kg
Front rocker	0.2061 kg
Front rocker	
Front rocker 6 ...	
PolyNURBS Part 2	**
Load Cases	
All Loads, Displacem...	
Support 1	
Support 2	

Property Editor

Name	Value

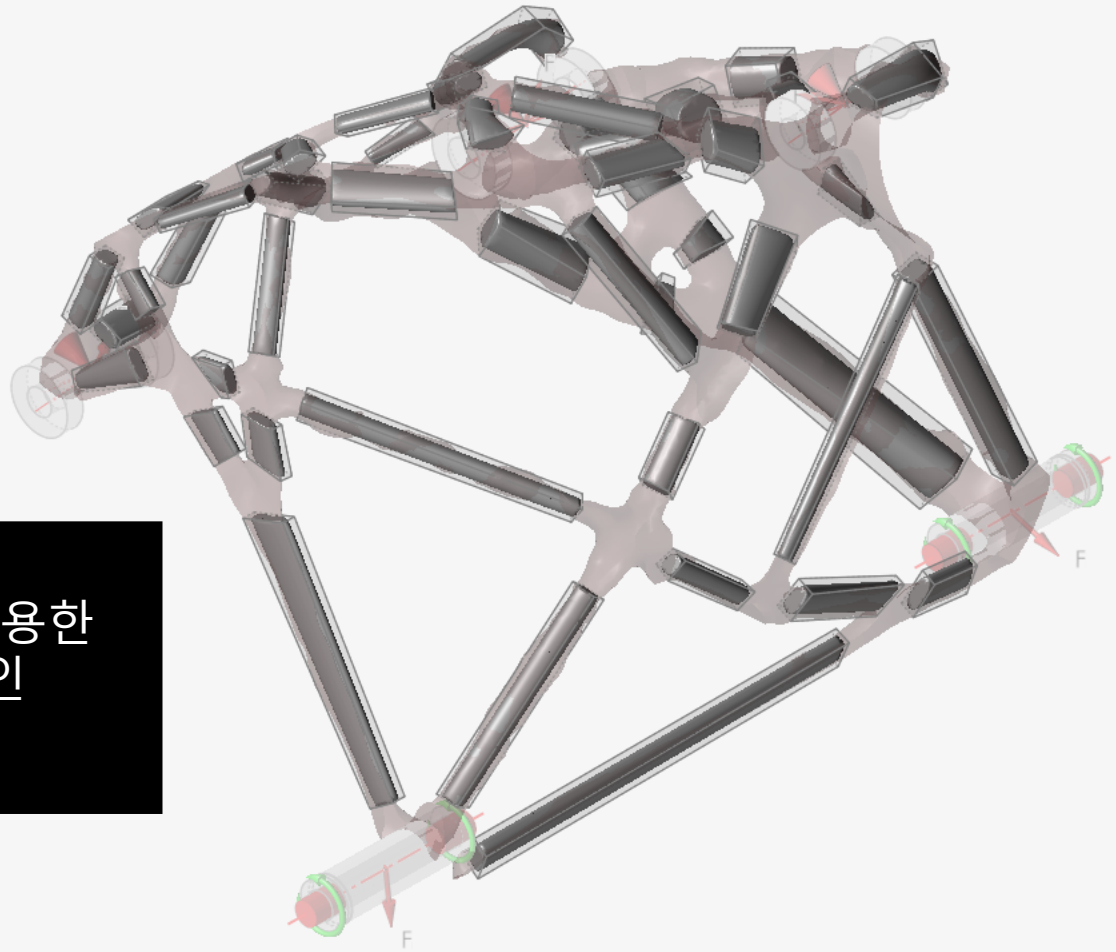

Wrap 기능을 이용한
기본 부재 디자인

MKS (m kg N s)

25°C 부분적으로 맑음 오전 9:28 2022-08-16

Front rocker polyNURBS Fit.stmod - Altair Inspire 2021.2.3 - OptiStruct

File Edit View Sketch Geometry PolyMesh PolyNURBS Structure Motion Manufacture Print3D Custom Custom

Files Measure Move Variables Primitive Fit Wrap Pave Move Bodies Mirror Bodies +/- Split Bridge Sharpen Repair Adjust Shape

Home Create Modify

Model

Object	Mass
Front rocker polyNURBS ...	
Front_rocker_nondes...	0.0022217 kg
Front_rocker_nondes...	0.0022217 kg
Front_rocker_nondes...	0.0026661 kg
Front_rocker_nondes...	0.0026661 kg
Front_rocker_nondes...	0.0022217 kg
Front_rocker_nondes...	0.0022217 kg
Front_rocker_nondes...	0.0073045 kg
Front_rocker_nondes...	0.0073045 kg
Point 1	0 kg
Point 2	0 kg
Point 3	0 kg
Front rocker	0.2061 kg
Front rocker	
Front rocker 6 ...	
PolyNURBS Part 2	
Load Cases	
All Loads, Displacem...	
Support 1	
Support 2	

Property Editor

Name	Value

Drag a face, edge or vertex to reshape the object.

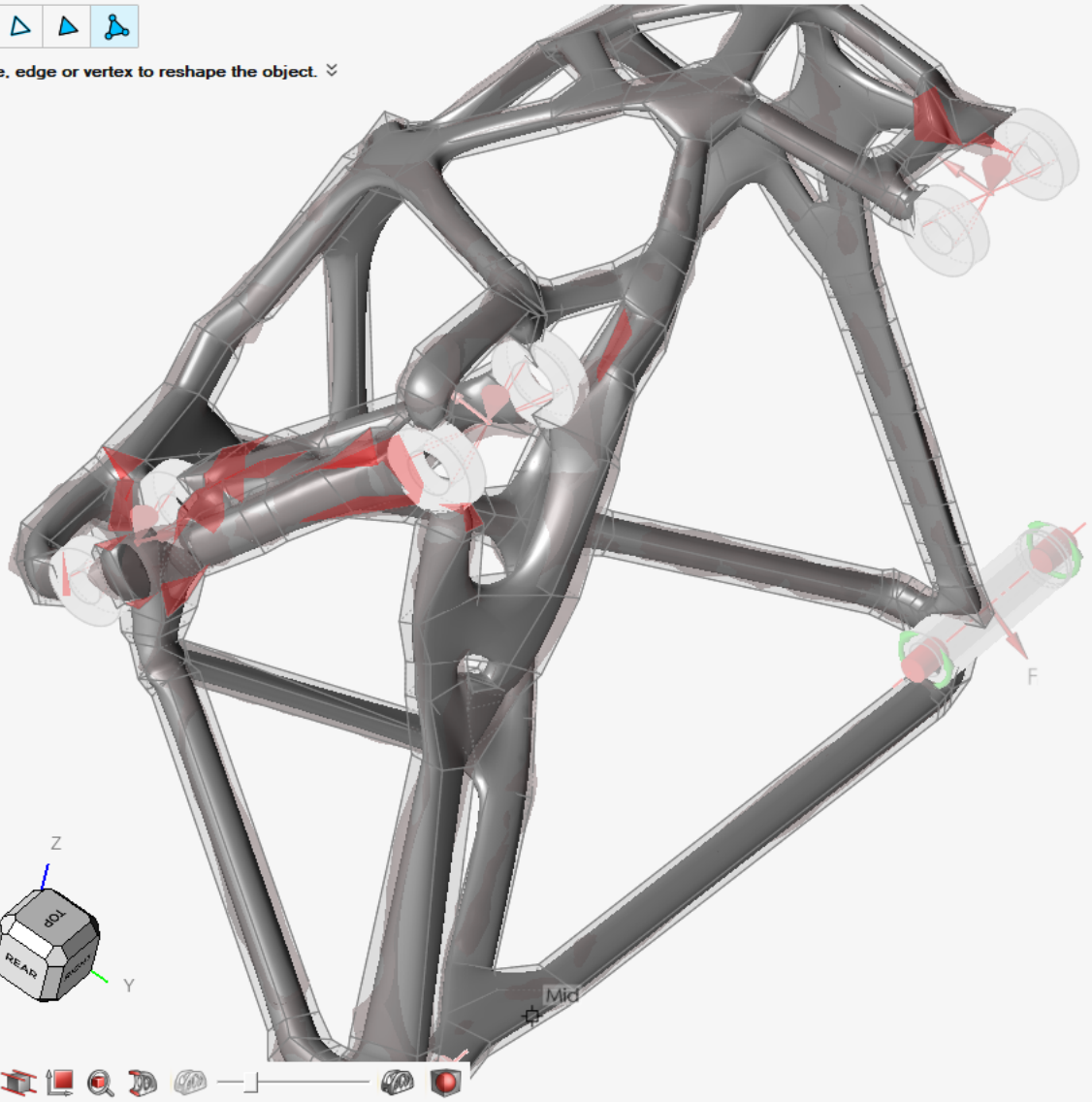

Bridge, Repair 기능을 이용한 교차점 영역 디자인

MKS (m kg N s)

29°C 대체로 화창 오후 1:00 2022-08-16

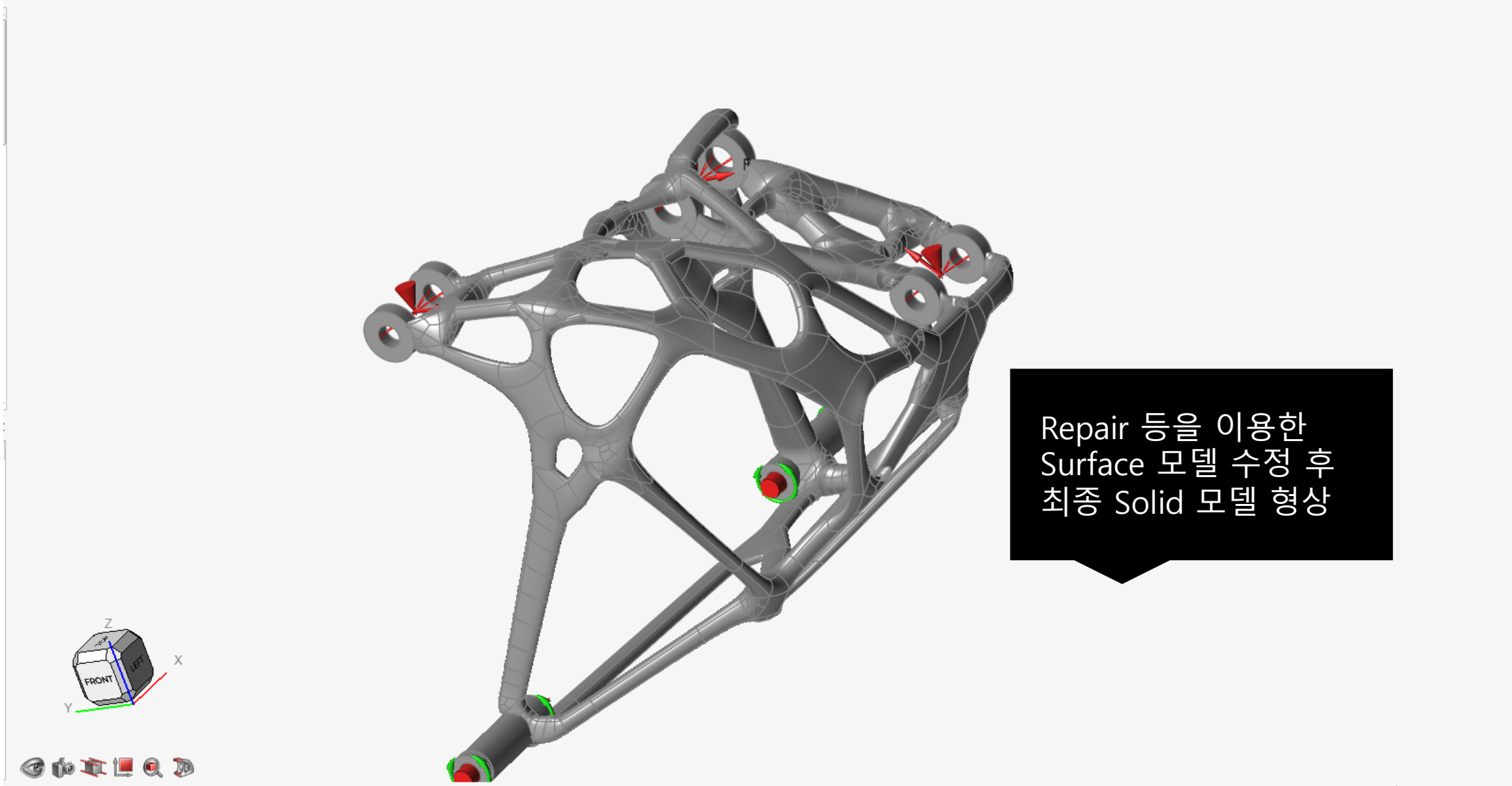

Repair 등을 이용한
Surface 모델 수정 후
최종 Solid 모델 형상

해석결과 및 작년 차량과의 비교

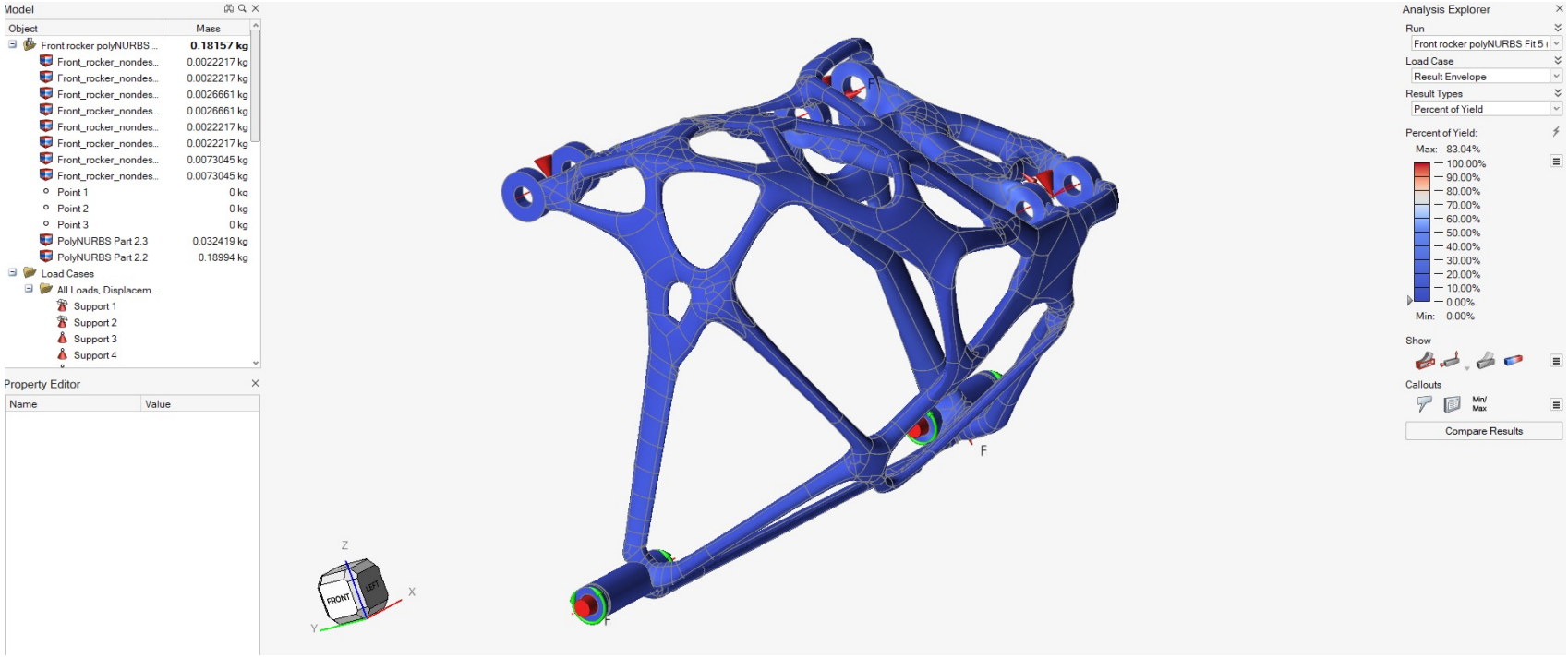

Result envelope에서 최대 응력이 항복 강도의 83.54%

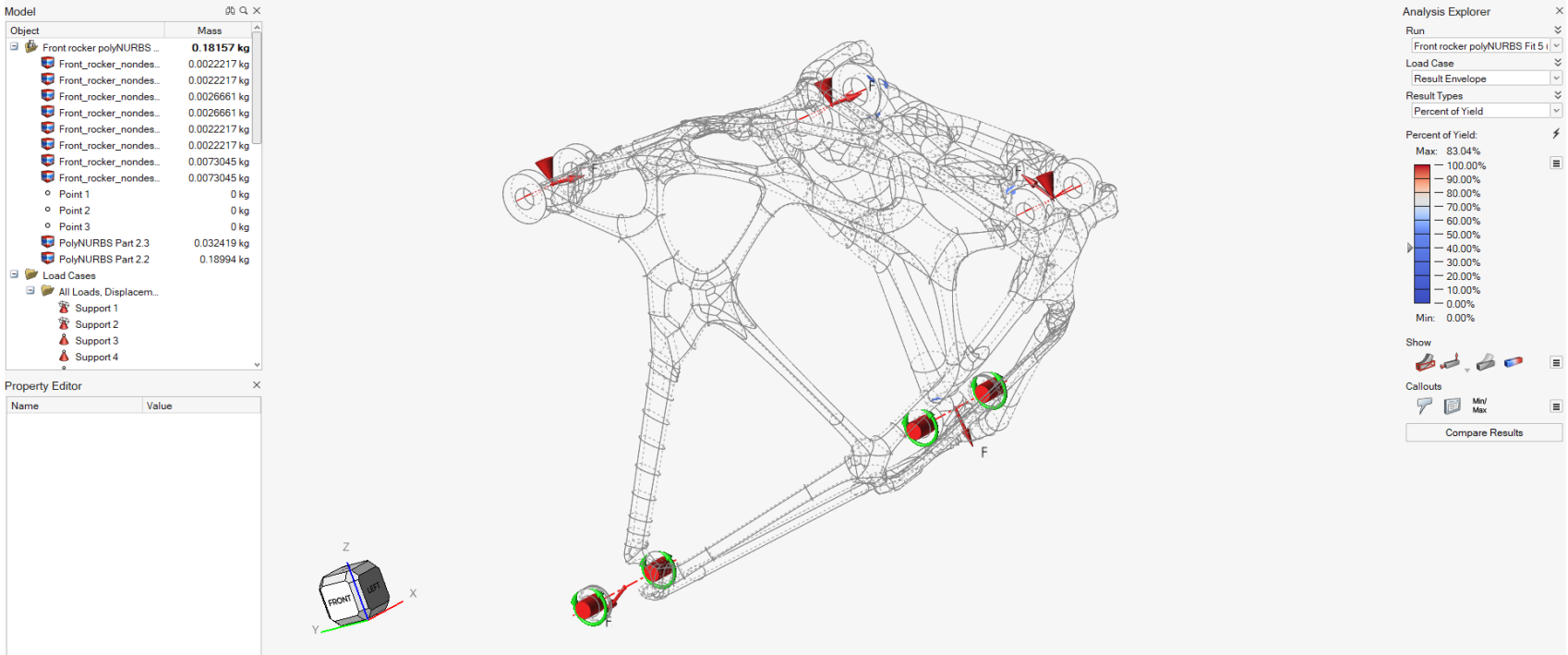

대부분의 부재에서 받는 응력이 항복 강도의 50%를 밑도는 모습

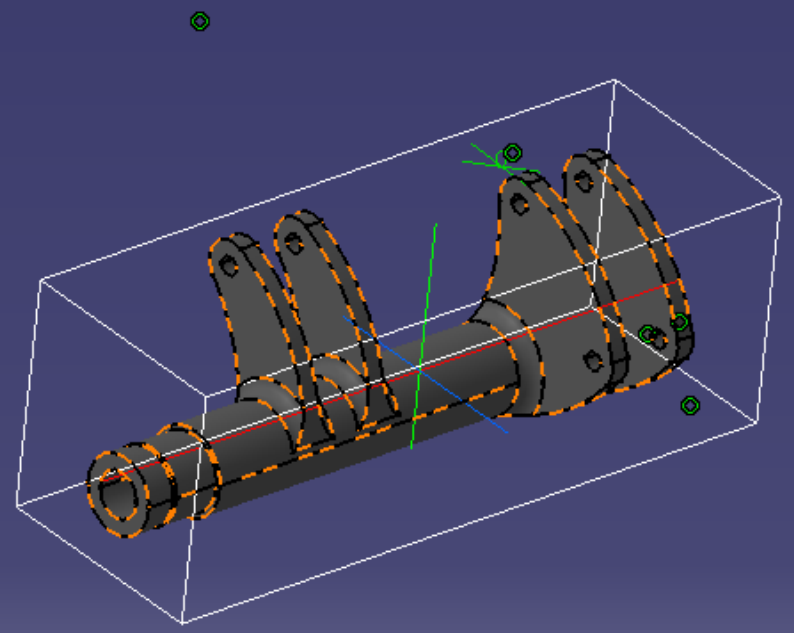

Measure Inertia

Definition

Selection : left rod...Front Suspension Rocker Axis .1

Result

Calculation mode : Exact

Type : Volume

Characteristics		Center Of Gravity (G	
Volume	1.272e-004m3	Gx	-41.431mm
Area	0.045m2	Gy	-148.446mm
Mass	0.345kg	Gz	646.207mm
Density	2710kg/m3		

작년 차량의
벨 크랭크 무게

Inertia / G | Inertia / O | Inertia / P | Inertia / Axis | Inertia / Axis System

Inertia Matrix / G

IoxG	1.444e-004kgxm2	IoyG	0.001kgxm2	IozG	0.001kgxm2
IxyG	8.186e-005kgxm2	IxzG	-4.764e-005kgxm2	IyzG	1.05e-005kgxm2

Principal Moments / G

M1	1.356e-004kgxm2	M2	0.001kgxm2	M3	0.001kgxm2

Keep measure | Create geometry | Export | Customize...

OK | Canc

Model

Object	Mass
Front rocker polyNURBS ...	**0.18157 kg**
Front_rocker_nondes...	0.0022217 kg
Front_rocker_nondes...	0.0026661 kg
Front_rocker_nondes...	0.0026661 kg
Front_rocker_nondes...	0.0022217 kg
Front_rocker_nondes...	0.0022217 kg
Front_rocker_nondes...	0.0073045 kg
Front_rocker_nondes...	0.0073045 kg
Point 1	0 kg
Point 2	0 kg
Point 3	0 kg
PolyNURBS Part 2.3	0.032419 kg
PolyNURBS Part 2.2	0.18994 kg
Load Cases	
All Loads, Displacem...	
Support 1	
Support 2	
Support 3	
Support 4	

Property Editor

Name	Value

최적화를 진행한
벨 크랭크 무게

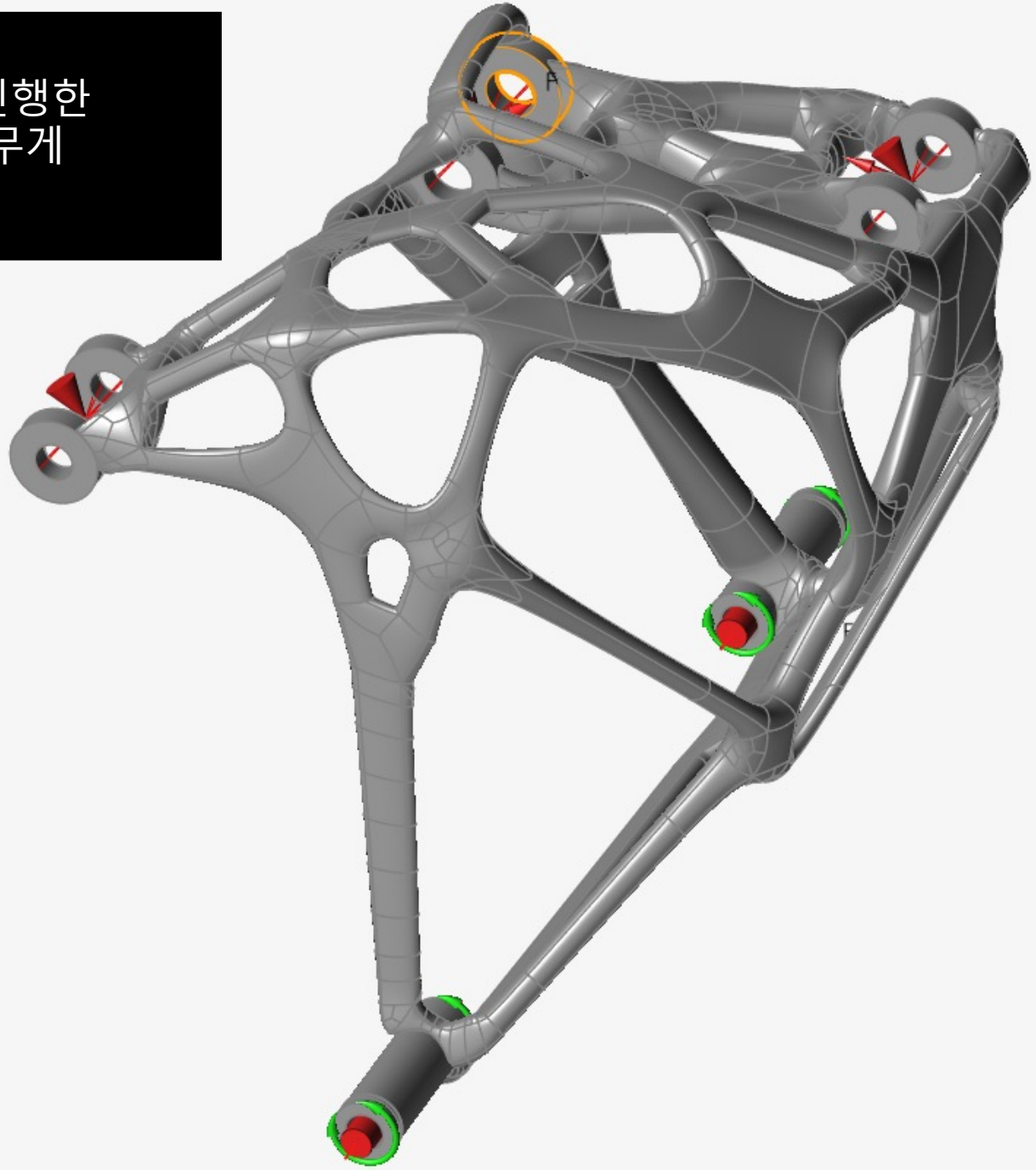

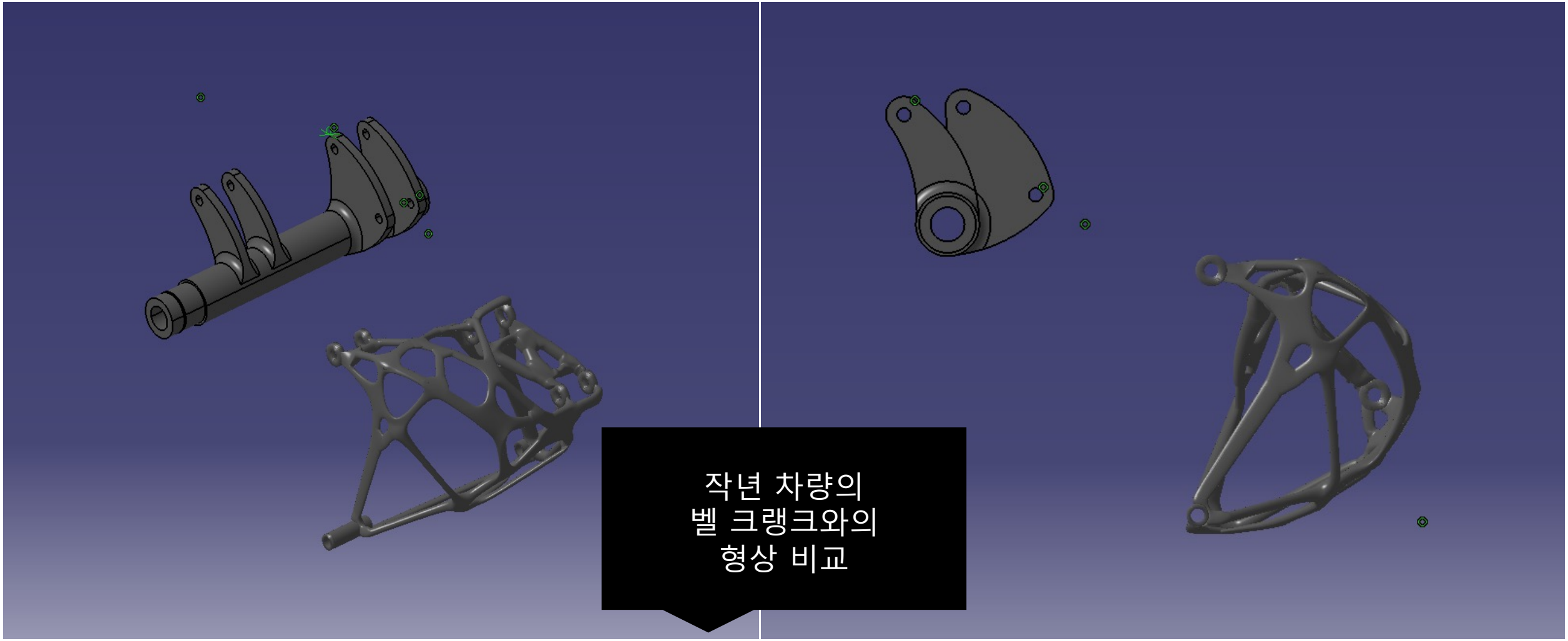
작년 차량의
벨 크랭크와의
형상 비교

2 서스펜션 벨 크랭크 최적설계

<결과>

작년 차량보다 벨 크랭크가 받는 하중과 모멘트 암 증가

그러나 345g에서 182g으로 47.3% 경량화 성공

재료가 Al 6061에서 Titanium 6Al4V 로 바뀌었다. 티타늄 합금이 질량 대비 강성이 2배 가량 좋은 것을 생각하면 동일한 하중과 동일한 모멘트 암일 때 50% 경량화 되어야 한다는 점이 자연스럽다. 하지만 무게를 두배 정도 증가시키는 요인들이 있음에도 50% 가량을 경량화 하였다는 점을 생각하면 최적화 효율이 굉장하다고 생각할 수 있다.

감사합니다.

한양대학교 자작자동차동아리 팀 RACE
-김범수, 민동혁

Q&A

한양대학교 자작자동차동아리 팀 RACE
-김범수, 민동혁